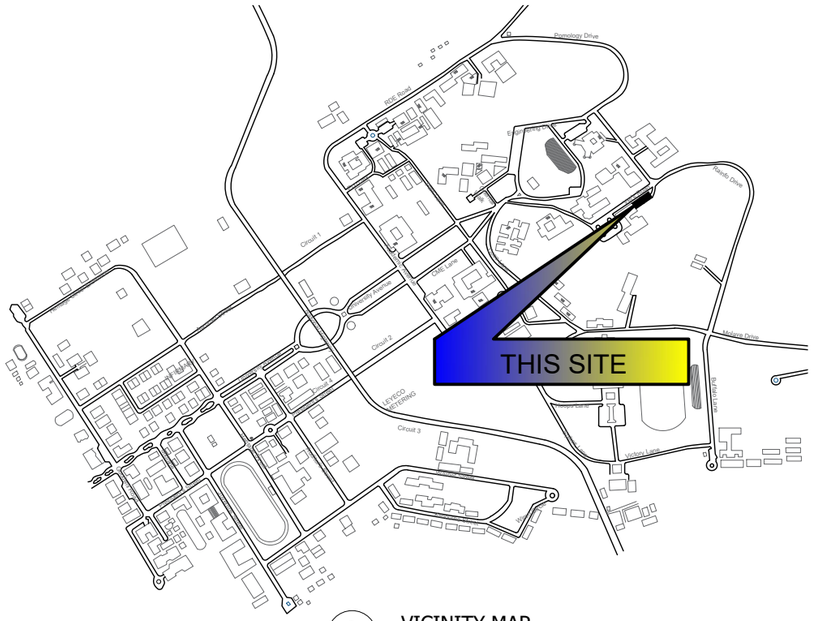
THIS SITE
Circuit 1
Circuit 2
Circuit 3
Rizal Drive
Malaya Drive
Mabini Drive
Bonifacio Drive
Roosevelt Drive
Roxas Drive
Quezon Drive
Aguinaldo Drive
Luna Drive
Del Pilar Drive
Magsaysay Drive
Aquino Drive
Osmeña Drive
Lopez Jaena Drive
Burgos Drive
Rizal Drive
Bagumbayan Drive
Dagohoy Drive
Legaspi Drive
Sampaguita Drive
Rizal Drive
Dona Pilar Drive
Dona Soledad Drive
Dona Trinidad Drive
Dona Consuelo Drive
Dona Victorina Drive
Dona Leonor Drive
Dona Paciencia Drive
Dona Luisa Drive
Dona Teresa Drive
Dona Esperanza Drive
Dona Encarnacion Drive
Dona Rosario Drive
Dona Cecilia Drive
Dona Aurora Drive
Dona Asuncion Drive
Dona Veronica Drive
Dona Victoria Drive
Dona Milagros Drive
Dona Presentacion Drive
Dona Fortunata Drive
Dona Josefa Drive
Dona Angela Drive
Dona Maria Drive
Dona Luz Drive
Dona Fe

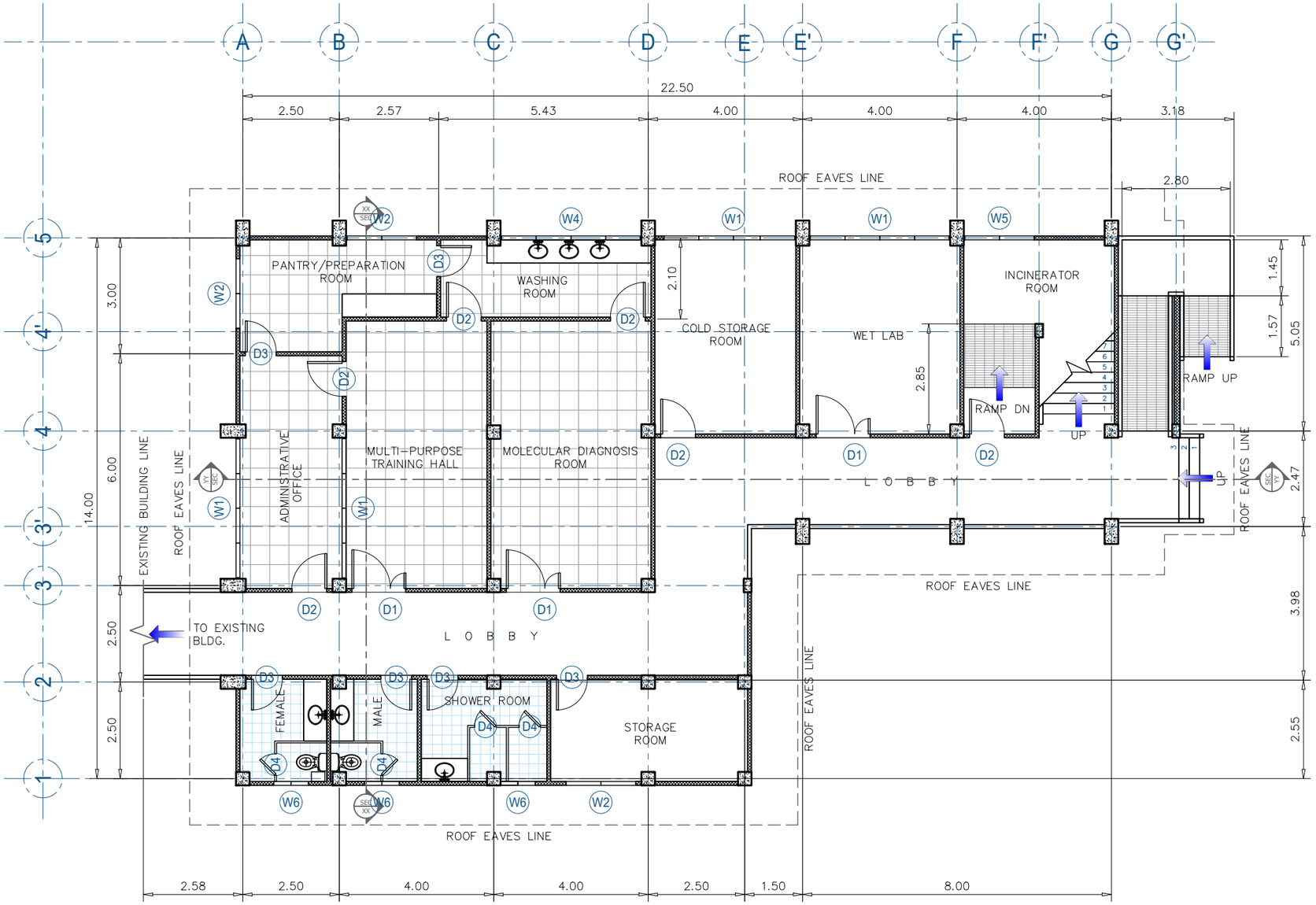

1 FIRST FLOOR PLAN
Scale: 1:125

TIN :	Approved by :	NOTE: THESE DRAWINGS AND SPECIFICATIONS ARE OWNED BY THE CONTRACT DESIGNER. SALE, LOANED, COPIED, OR REUSED AS INSTRUMENTS OF SERVICE ARE THE ARCHITECTURAL PROPERTIES AND DESIGNER'S. THE ARCHITECT RETAINS THE SUBJECT FOR ANY PURPOSE NOT INTENDED OR NOT AGREED TO IN WRITING BY THE ARCHITECT. REPORT THE SUBJECT FOR ANY PURPOSE OTHER THAN THE ORIGINAL SPECIFIED OR NOT AGREED TO IN WRITING BY THE ARCHITECT IS AT THE RISK OF THE USER. THE ARCHITECT DISCLAIMS ANY LIABILITY OF ANY KIND FOR ANY USE OF THE DESIGNS OR DRAWINGS FOR ANY OTHER PURPOSES OR BUILDINGS. REPORT DESIGNS PARTLY OR IN WHOLE, WITHOUT THE WRITTEN CONSENT OF THE ARCHITECT OR OWNER OF THE DESIGNERS.	Project Title :	Checked by :	Noted by :	Conformed by :	Approved by :	Concept by :	A7	02
PRC :						AutoCAD by :		
PTR :						Date Started :	SHEET NO.	
Date :			CONSTRUCTION OF ANIMAL TESTING FACILITY	Engr. MARIO LILIO P. VALENZONA	Dr. SANTIAGO T. PENA, Jr.	Dr. DANIEL LESLIE S. TAN	Dr. EDGARDO E. TULIN	Date Finished :	02	27
Place :	Architect of Record		Location : VSU Main Campus, Baybay City, Leyte Philippines	DIRECTOR, PPO	DEAN, CVM	VP OF ADMINISTRATIVE AND FINANCE	VSU PRESIDENT	Place :		

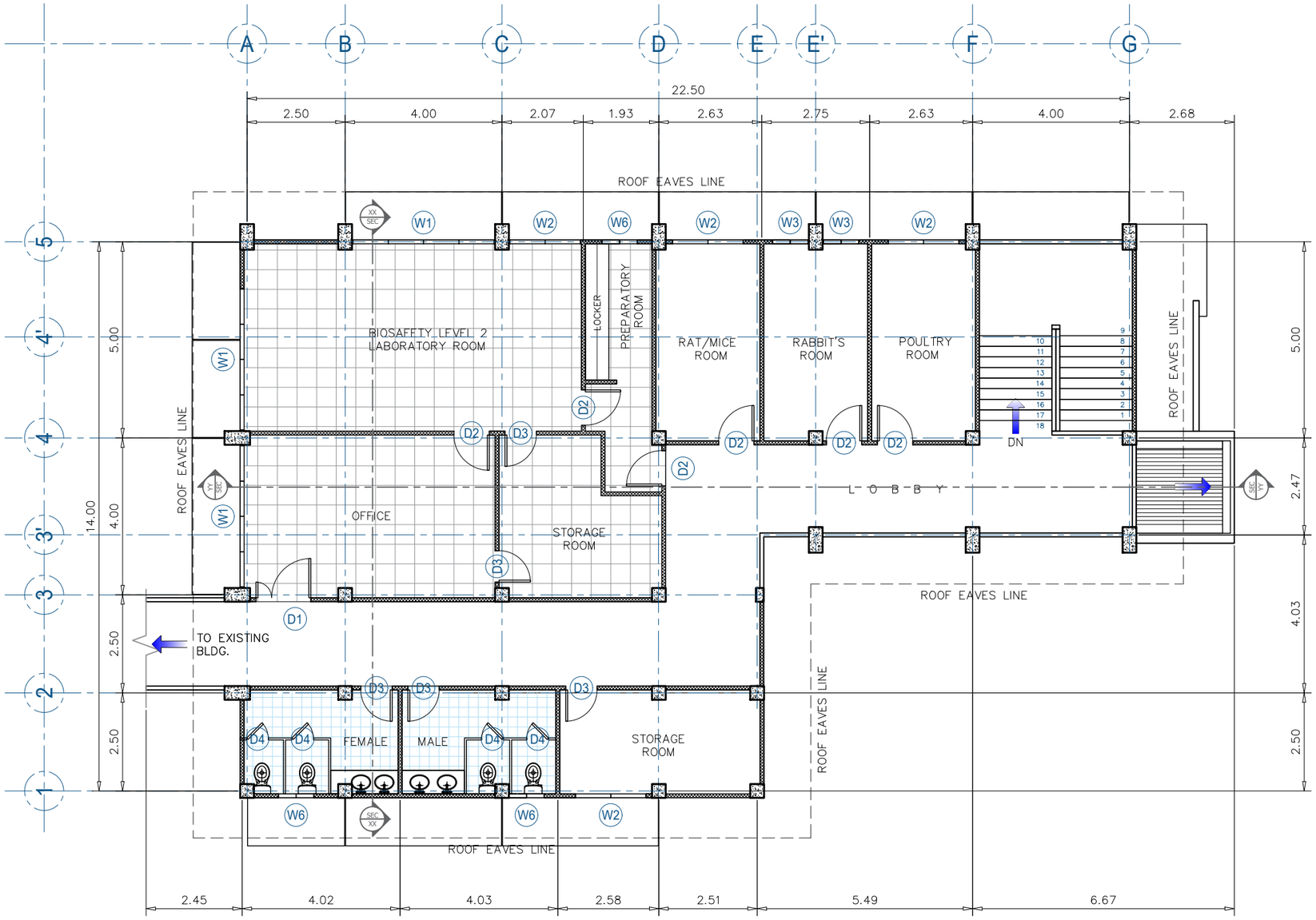

1 SECOND FLOOR PLAN

Scale: 1:125

TIN :	Approved by :	# RE: THESE DRAWINGS AND SPECIFICATIONS AND OTHER CONTRACT DOCUMENTS ...	Project Title :	Checked by :	Noted by :	Conformed by :	Approved by :	Concept by :
PRC :			CONSTRUCTION OF ANIMAL TESTING FACILITY	Engr. MARIO LILIO P. VALENZONA	Dr. SANTIAGO T. PENA, Jr.	Dr. DANIEL LESLIE S. TAN	Dr. EDGARDO E. TULIN	AutoCAD by :
PTR :								Date Started :
Date :								Date Finished :
Place :	Architect of Record		Location : VSU Main Campus, Baybay City, Leyte Philippines	DIRECTOR, PPO	DEAN, CVM	VP OF ADMINISTRATIVE AND FINANCE	VSU PRESIDENT	Place :

A7 03

SHEET NO.

03 27

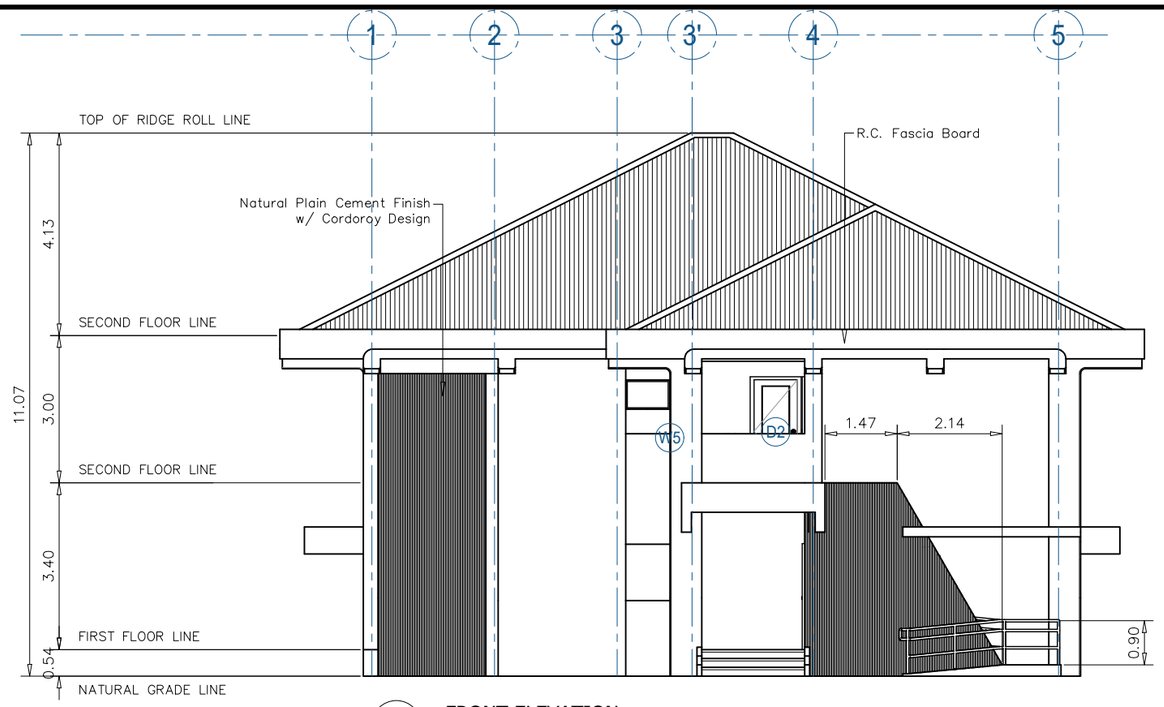

1 FRONT ELEVATION
Scale: 1:125

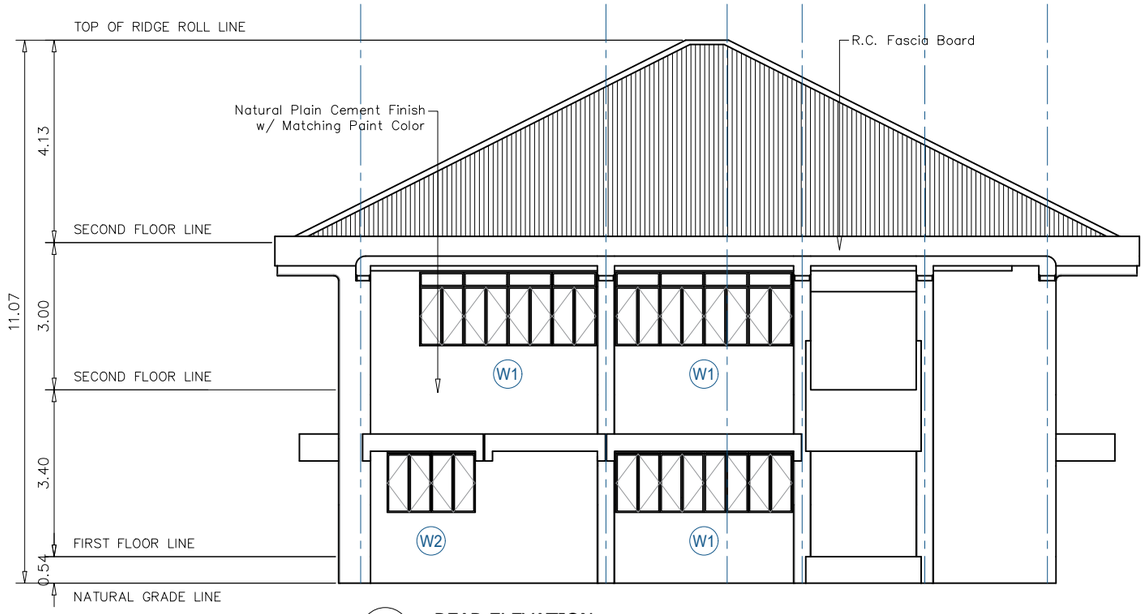

2 REAR ELEVATION
Scale: 1:125

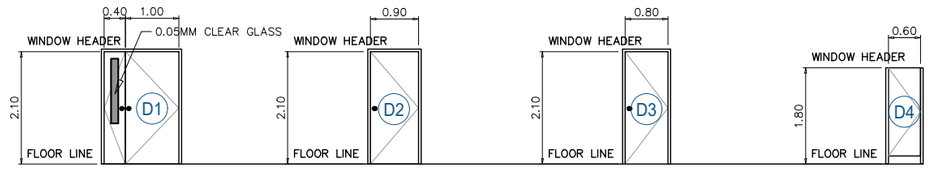

SCHEDULE OF DOORS SCALE : 1:125M.

NO. OF DOORS	DESIGNATION	HEIGHT	WIDTH	SILL HEIGHT	TRANSOM	NO.OF SET	REMARKS
D1	2 FLUSH DOORS	2.10	1.40	NONE	NONE	4	SWING FLUSH DOOR W/ JAMB AND CLEAR GLASS
D2	1 FLUSH DOOR	2.10	0.90	NONE	NONE	12	SWING FLUSH DOOR W/ WOODEN JAMB
D3	1 FLUSH DOOR	2.10	0.80	NONE	NONE	11	–DO–
D4	1 FLUSH DOOR	1.80	0.60	NONE	NONE	8	–DO–

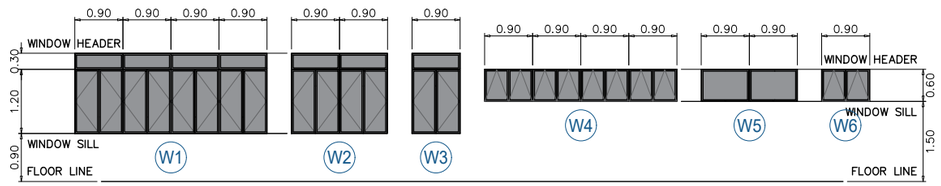

SCHEDULE OF WINDOWS SCALE : 1:125M.

NO. OF WINDOWS	DESIGNATION	HEIGHT	WIDTH	SILL HEIGHT	TRANSOM	NO.OF SET	REMARKS
W1	4PANEL WINDOW	1.20	3.60	0.90	0.30	6	SWING PANEL AND STEEL CASEMENT FRAME W/ CLEAR GLASS
W2	2PANEL WINDOW	1.20	1.80	0.90	0.30	6	–DO–
W3	1PANEL WINDOW	1.20	0.90	0.90	0.30	2	–DO–
W4	4PANEL WINDOW	0.60	3.60	1.50	NONE	1	–DO–
W5	2PANEL WINDOW	0.60	1.80	1.50	NONE	2	SLIDING PANEL WITH ANALOK FRAME AND CLEAR GLASS
W6	1PANEL WINDOW	0.60	0.60	1.50	NONE	6	SWING PANEL AND STEEL CASEMENT FRAME W/ CLEAR GLASS

VISAYAS STATE UNIVERSITY	TIN :	Approved by :	NOTE: THESE DRAWINGS AND SPECIFICATIONS ARE OWNED BY AND CONSTITUTE PROPERTY OF VSU. THEY MUST NOT BE COPIED OR REPRODUCED IN ANY FORM OR MANNER WHATSOever WITHOUT THE EXPRESS WRITTEN CONSENT OF VSU.	Project Title :	Checked by :	Noted by :	Conformed by :	Approved by :	Concept by :	A7 04
	PRC :			CONSTRUCTION OF ANIMAL TESTING FACILITY	Engr. MARIO LILIO P. VALENZONA	Dr. SANTIAGO T. PENA, Jr.	Dr. DANIEL LESLIE S. TAN	Dr. EDGARDO E. TULIN	AutoCAD by :	
	PTR :								Date Started :	SHEET NO.
	Date :								Date Finished :	04 27
	Place :	Architect of Record		Location : VSU Main Campus, Baybay City, Leyte Philippines	DIRECTOR, PPO	DEAN, CVM	VP OF ADMINISTRATIVE AND FINANCE	VSU PRESIDENT	Place :	

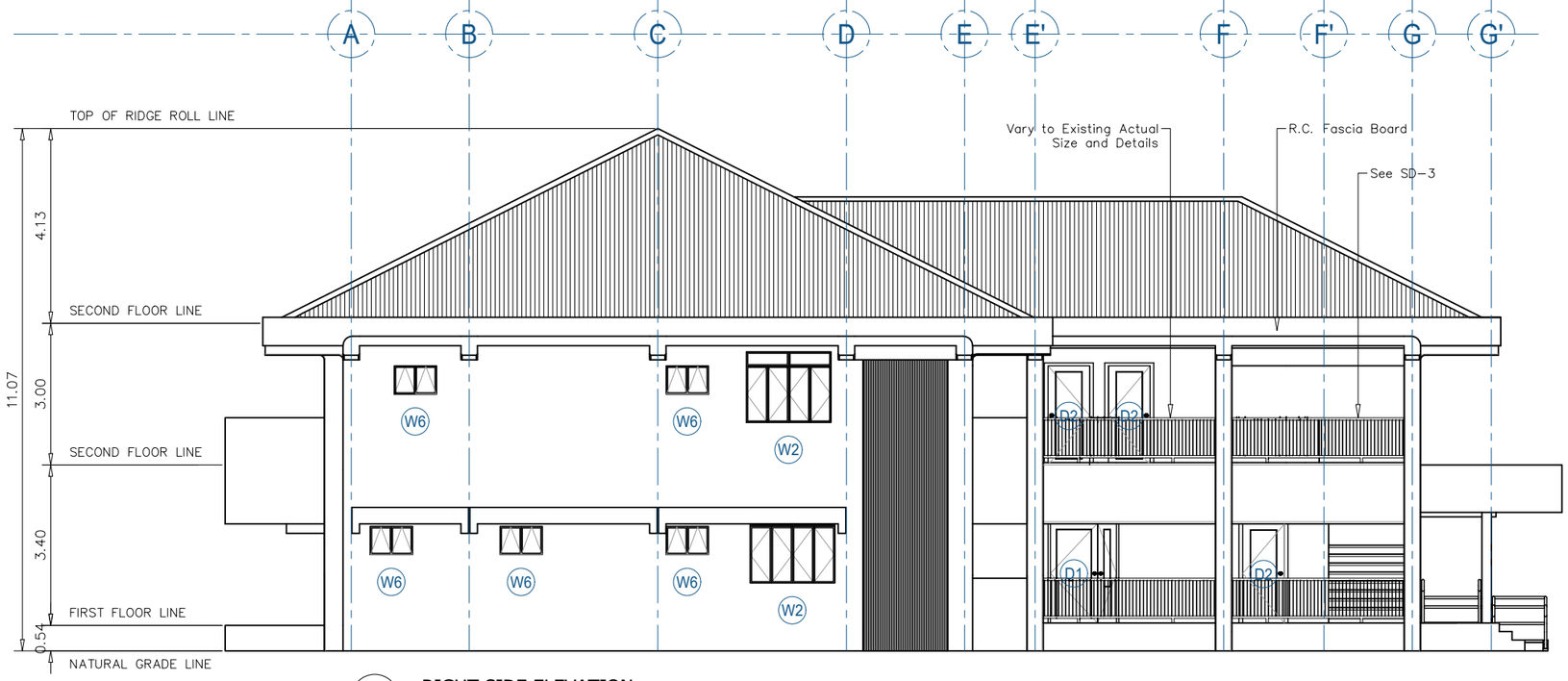

1 RIGHT SIDE ELEVATION
Scale: 1:125

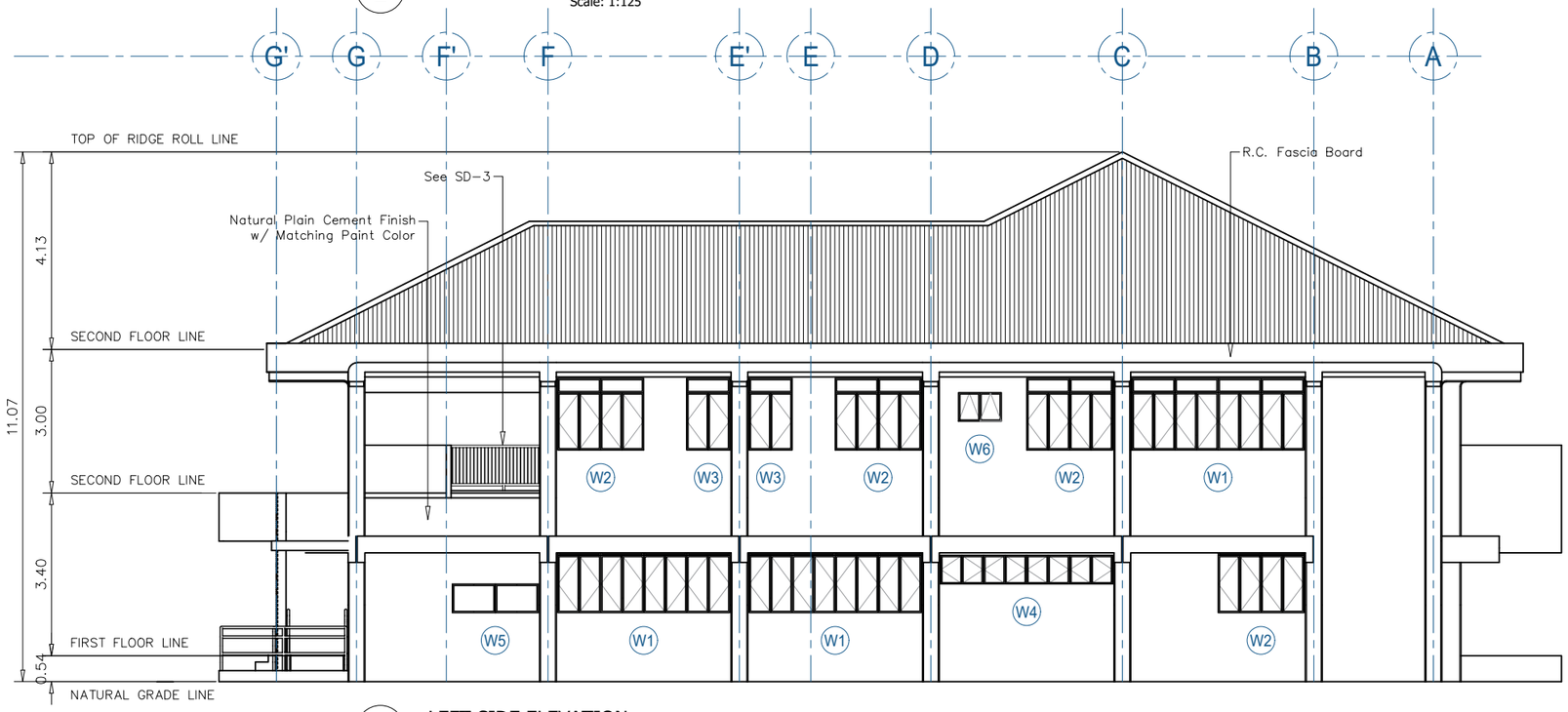

2 LEFT SIDE ELEVATION
Scale: 1:125

TIN :	Approved by :	NOTE: THESE DRAWINGS AND SPECIFICATIONS ARE OWNED BY AND THE PROPERTY OF VISAYAS STATE UNIVERSITY. REPRODUCTION OR USE FOR ANY PURPOSE OTHER THAN THAT AUTHORIZED BY VSU IS PROHIBITED.	Project Title :	Checked by :	Noted by :	Conformed by :	Approved by :	Concept by :
PRC :			CONSTRUCTION OF ANIMAL TESTING FACILITY	Engr. MARIO LILIO P. VALENZONA	Dr. SANTIAGO T. PENA, Jr.	Dr. DANIEL LESLIE S. TAN	Dr. EDGARDO E. TULIN	AutoCAD by :
PTR :								Date Started :
Date :								Date Finished :
Place :	Architect of Record		Location : VSU Main Campus, Baybay City, Leyte Philippines	DIRECTOR, PPO	DEAN, CVM	VP OF ADMINISTRATIVE AND FINANCE	VSU PRESIDENT	Place :

A7 05
SHEET NO.
05 27

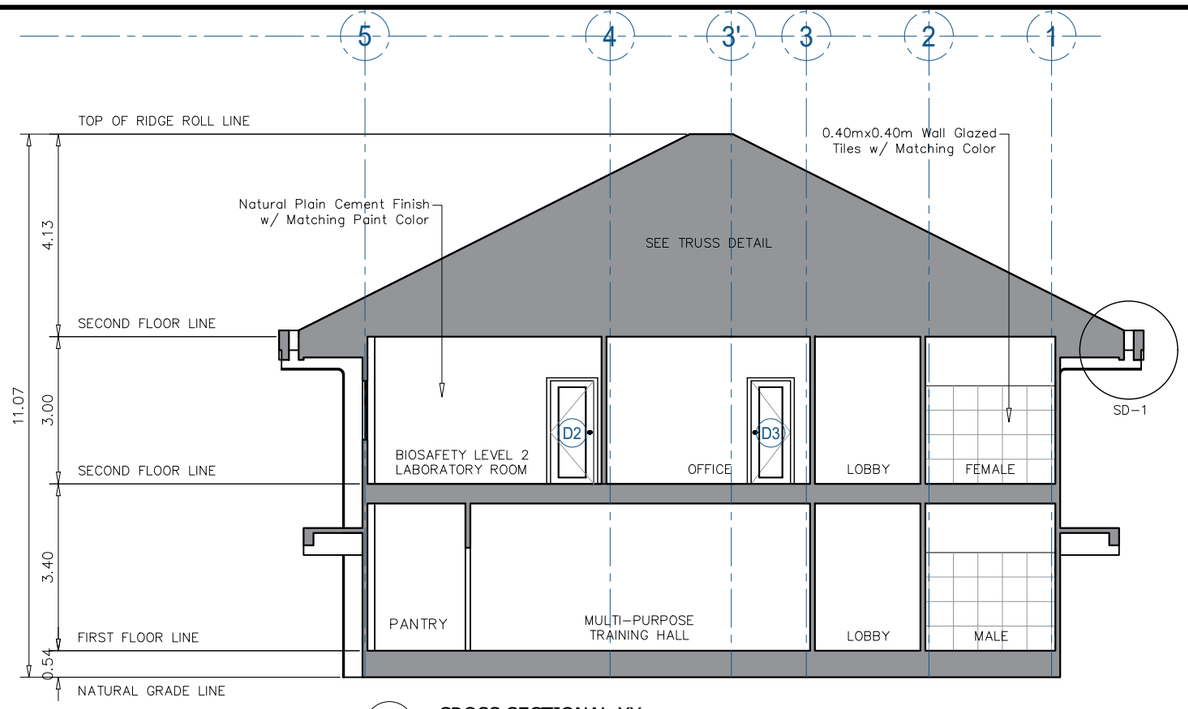

1 CROSS SECTIONAL-XX

Scale: 1:125

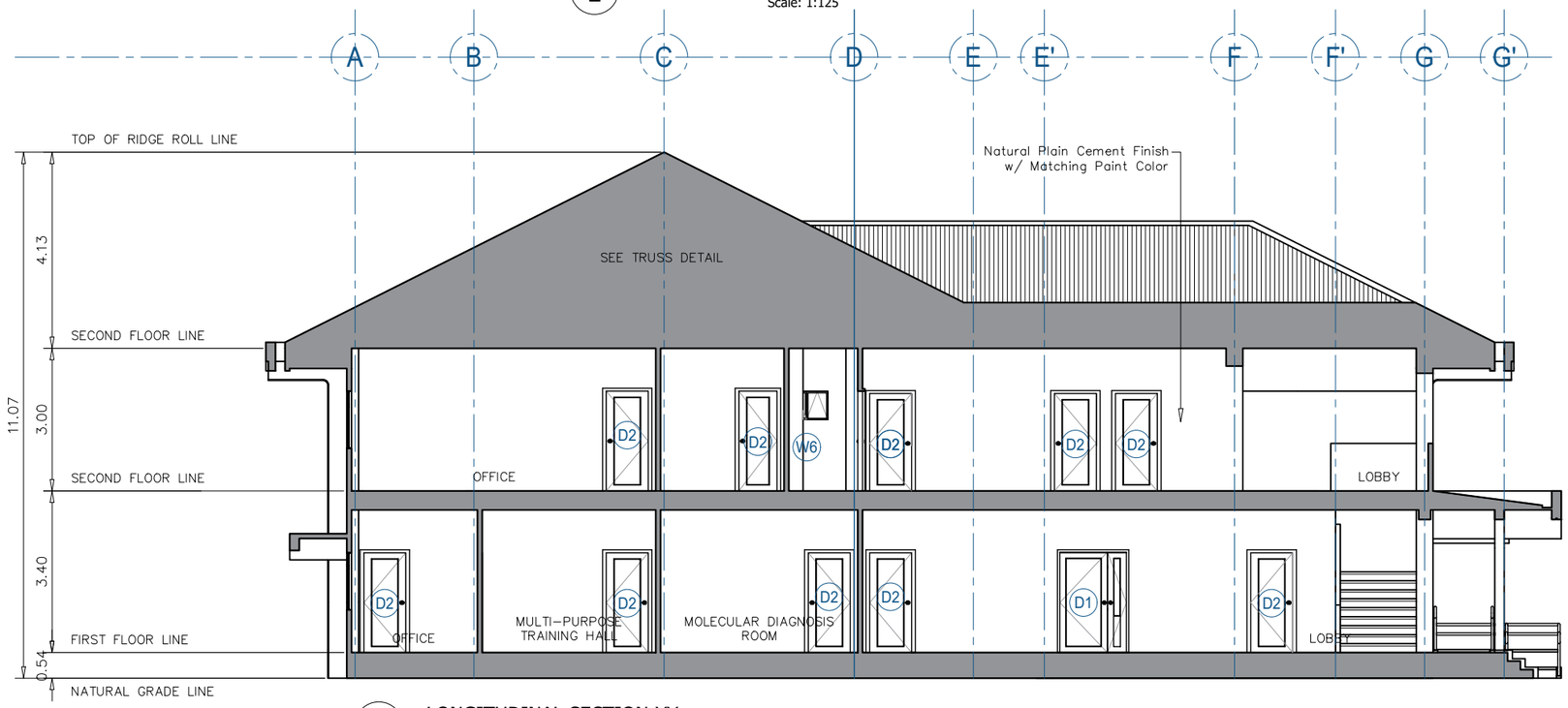

2 LONGITUDINAL SECTION-YY

Scale: 1:125

VISAYAS STATE UNIVERSITY	TIN :	Approved by :	NOTE : THESE DRAWINGS AND SPECIFICATIONS ARE OTHER CONTRACT DOCUMENTS SHALL REMAIN PROPERTY OF ARCHITECT AND SHALL NOT BE REPRODUCED OR PUBLISHED WITHOUT THE WRITTEN PERMISSION OF ARCHITECT.	Project Title :	Checked by :	Noted by :	Conformed by :	Approved by :	Concept by :	A7 06
	PRC :			CONSTRUCTION OF ANIMAL TESTING FACILITY	Engr. MARIO LILIO P. VALENZONA	Dr. SANTIAGO T. PENA, Jr.	Dr. DANIEL LESLIE S. TAN	Dr. EDGARDO E. TULIN	AutoCAD by :	
	PTR :								Date Started :	SHEET NO.
	Date :								Date Finished :	06 27
	Place :	Architect of Record		Location : VSU Main Campus, Baybay City, Leyte Philippines	DIRECTOR, PPO	DEAN, CVM	VP OF ADMINISTRATIVE AND FINANCE	VSU PRESIDENT	Place :	

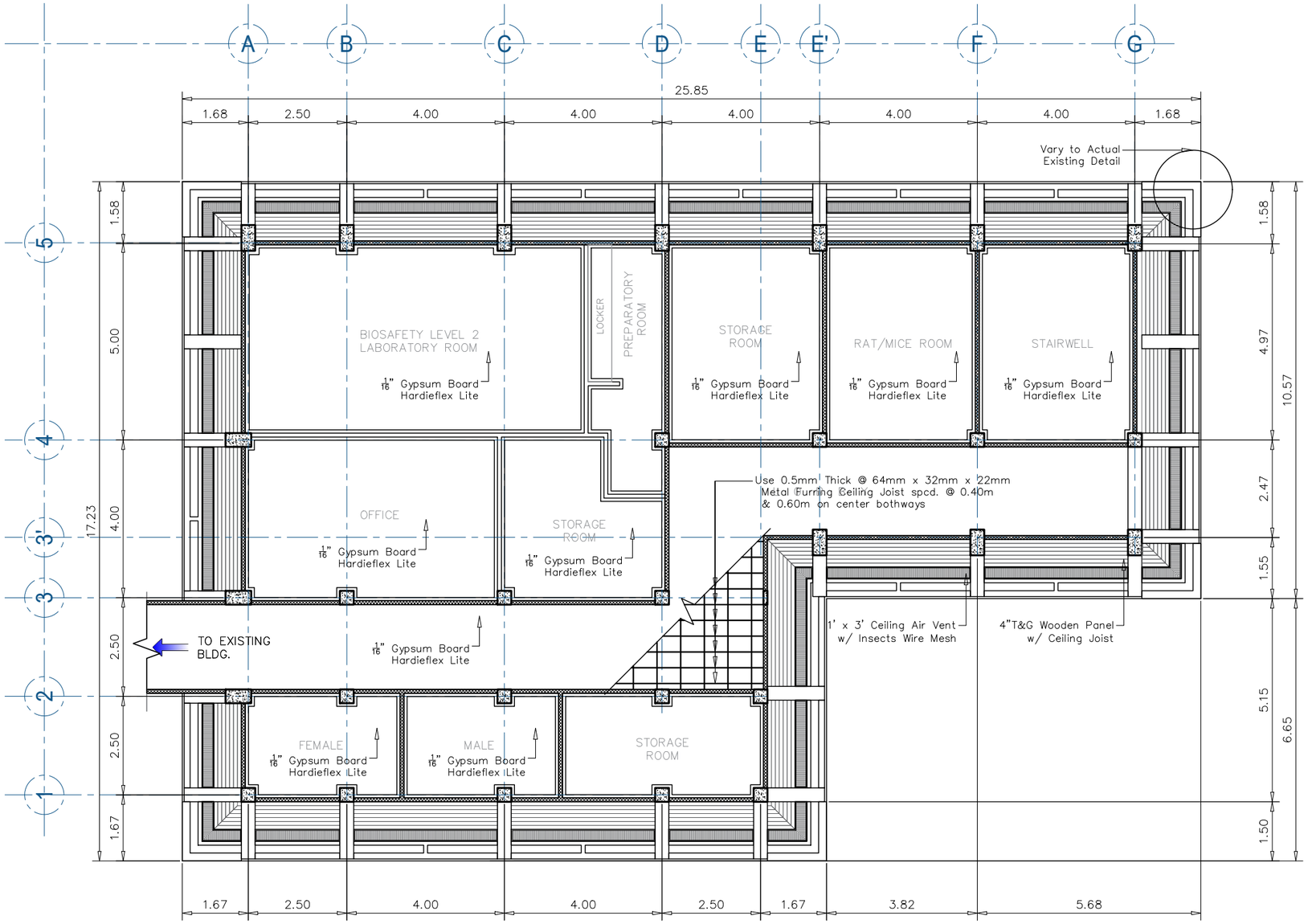

1 REFLECTED CEILING PLAN
Scale: 1:125

VISAYAS STATE UNIVERSITY	TIN :	Approved by :	NOTE: THESE DRAWINGS AND SPECIFICATIONS ARE OTHER CONTRACT DOCUMENTS. ANY ERRORS, OMISSIONS OR DEFICIENCIES IN DRAWINGS AND DOCUMENTS THE ARCHITECT, REPORT THE SUBJECT FOR WHICH THEY ARE MADE, REGARDING THE ARCHITECT'S FAILURE TO REPORT ANY ERROR, OMISSION OR DEFICIENCY MADE EARLIER IN THE DRAWINGS AND DOCUMENTS THE USE, INTERPRETATION OF THESE THE OTHER PROJECTS OF BUILDINGS, NEITHER SUCCESSIVE PARTS OF A WHOLE, WITHOUT THE WRITTEN CONSENT OF ARCHITECT THE AUTHOR OF SAID DOCUMENTS.	Project Title :	Checked by :	Noted by :	Conformed by :	Approved by :	Concept by :	A7	07
	PRC :							AutoCAD by :		
	PTR :							Date Started :	SHEET NO.	
	Date :							Date Finished :	07	27
	Place :	Architect of Record		Location : VSU Main Campus, Baybay City, Leyte Philippines	DIRECTOR, PPO	DEAN, CVM	VP OF ADMINISTRATIVE AND FINANCE	VSU PRESIDENT	Place :	

CONSTRUCTION OF ANIMAL TESTING FACILITY

Engr. MARIO LILIO P. VALENZONA | Dr. SANTIAGO T. PENA, Jr. | Dr. DANIEL LESLIE S. TAN | Dr. EDGARDO E. TULIN

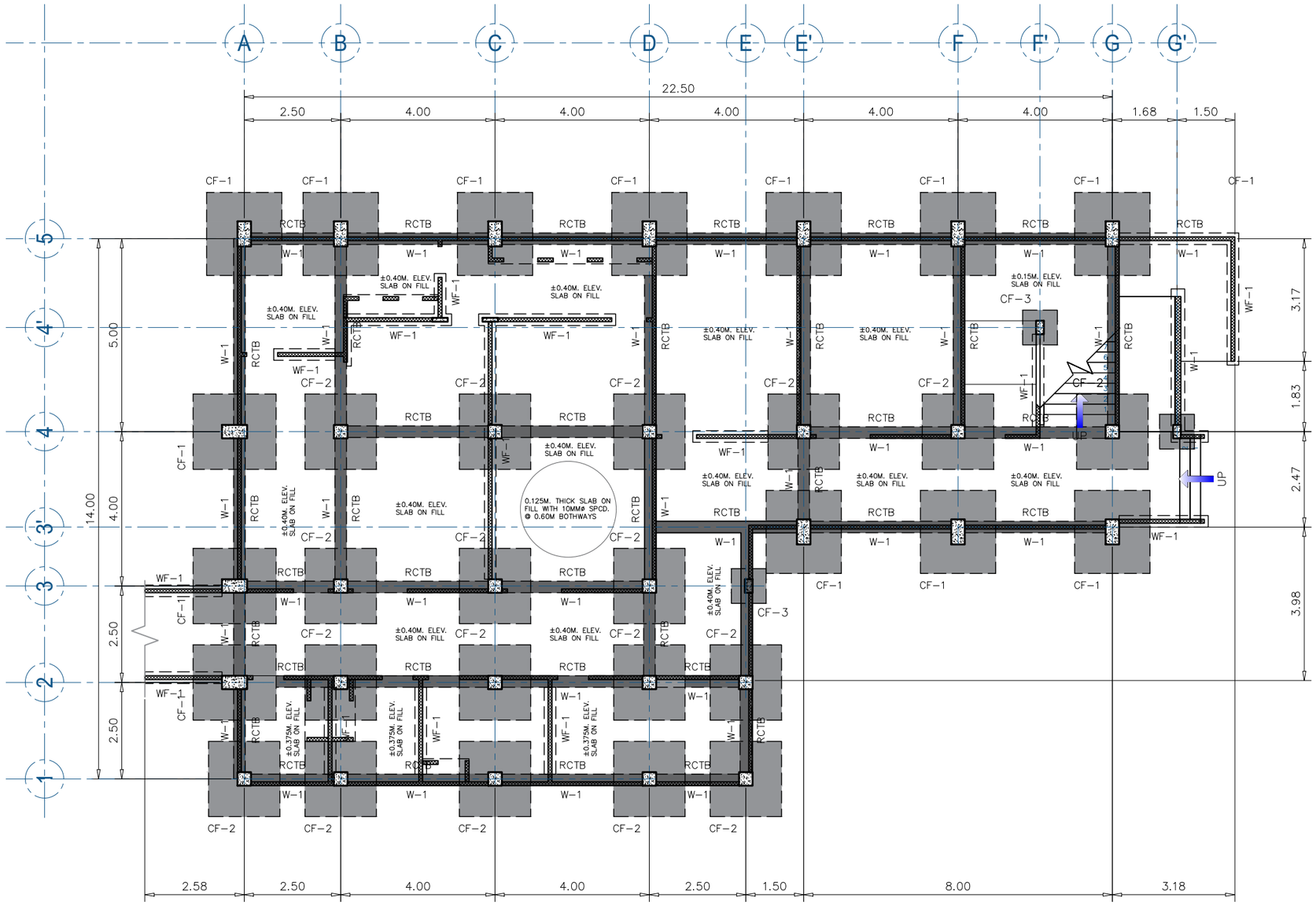

1 FOUNDATION PLAN

Scale: 1:125

TIN :	Approved by :	# FT.	Project Title :	Checked by :	Noted by :	Conformed by :	Approved by :	Concept by :	S7 01
PRC :		THESE DRAWINGS AND SPECIFICATIONS ARE OWNER CONTRACT DOCUMENTS. SUCH, CLAIMS, COPIES, OR USAGE OF INSTRUMENTS OF SERVICE, ARE THE INTELLECTUAL PROPERTIES AND DOCUMENTS OF ARCHITECT. REGARD THE SUBJECT FOR OWNER THEY ARE MADE. ARCHITECT OR ART. 7.1.1.1.1.1 OF INVOICE, OR ANY PERSON TO BUILD OWNER OR TO ANY OTHER OF THIS DOCUMENTS FOR USE IN REPETITION OF THIS OR OTHER PROJECTS OR BUILDINGS, WITHOUT ARCHITECT WRITTEN CONSENT OF ARCHITECT OR AUTHOR OF SUCH DESIGNS.	CONSTRUCTION OF ANIMAL TESTING FACILITY	Engr. MARIO LILIO P. VALENZONA	Dr. SANTIAGO T. PENA, Jr.	Dr. DANIEL LESLIE S. TAN	Dr. EDGARDO E. TULIN	AutoCAD by :	SHEET NO.
PTR :								Date Started :	08 27
Date :								Date Finished :	
Place :	Structural Engineer		Location : VSU Main Campus, Baybay City, Leyte Philippines	DIRECTOR, PPO	DEAN, CVM	VP OF ADMINISTRATIVE AND FINANCE	VSU PRESIDENT	Place :	

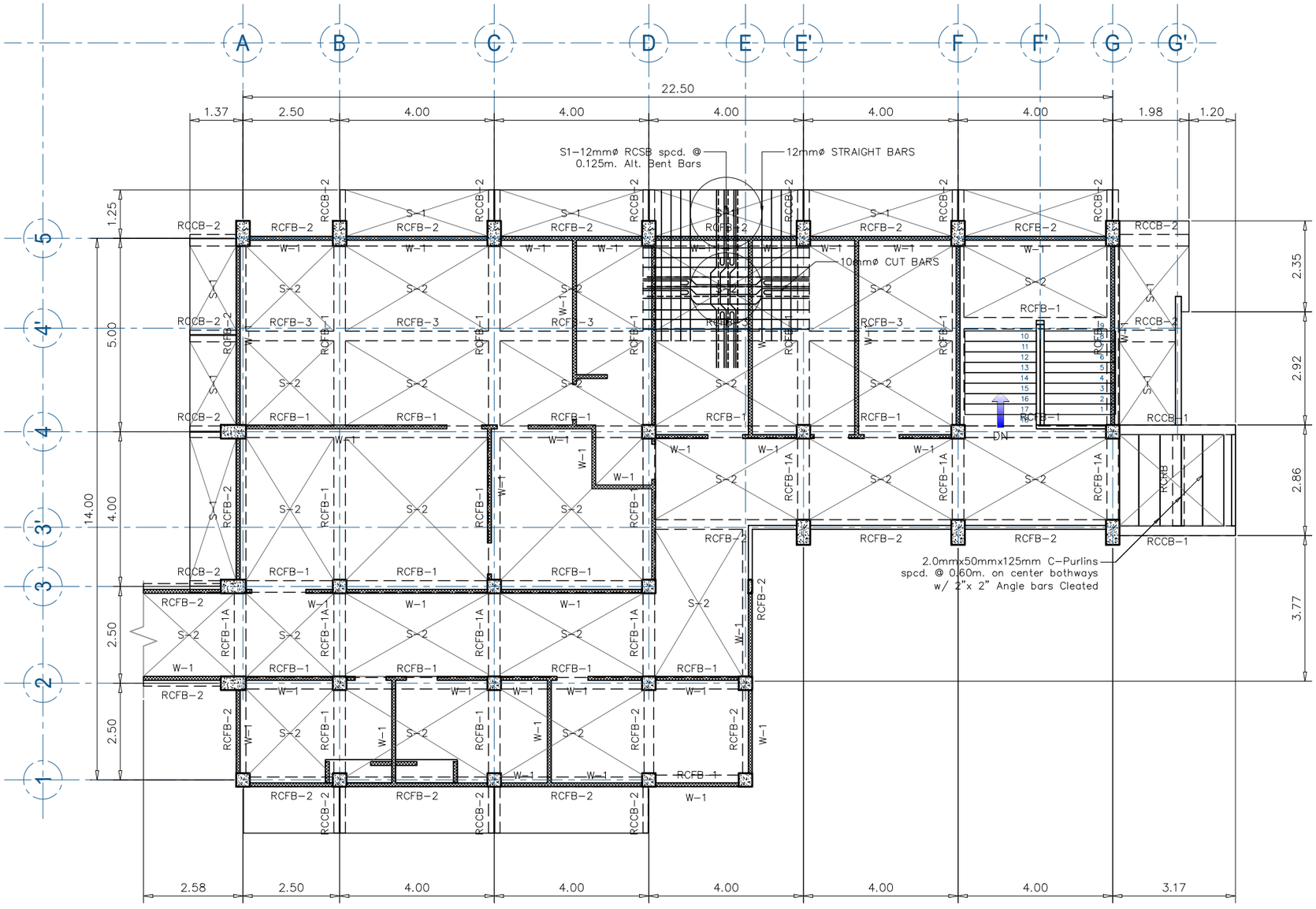

1 SECOND FLOOR FRAMING PLAN

Scale: 1:125

VISAYAS STATE UNIVERSITY	TIN :	Approved by :	NOTE: THESE DRAWINGS AND SPECIFICATIONS ARE OWNED CONTRACT DOCUMENTS SOLE OWNER STAMPED OR ISSUED AS INSTRUMENTS OF SERVICE AND THE INTELLECTUAL PROPERTY HAVE DESIGNERS OF ARCHITECT WITHIN THE SUBJECT FOR WHICH THEY WERE MADE DESPITE OR NOT THEY HAVE BEEN PAID. ALL OR PARTIAL OF ANY PERSON TO DEVELOPED OR TO WHO OWNER OF WAS DESIGNED THE USE ARCHITECTURE OR WITH OTHER PROJECTS OR REGARDING NEITHER DESCRIBED PARTS OR IN WHOLE WITHOUT THE WRITTEN CONSENT OF ARCHITECT OR OWNER OF WHO DESIGNED.	Project Title :	Checked by :	Noted by :	Conformed by :	Approved by :	Concept by :	S7 02
	PRC :			CONSTRUCTION OF ANIMAL TESTING FACILITY	Engr. MARIO LILIO P. VALENZONA	Dr. SANTIAGO T. PENA, Jr.	Dr. DANIEL LESLIE S. TAN	Dr. EDGARDO E. TULIN	AutoCAD by :	SHEET NO.
	PTR :								Date Started :	
	Date :								Date Finished :	09 27
	Place :	Structural Engineer		Location : VSU Main Campus, Baybay City, Leyte Philippines	DIRECTOR, PPO	DEAN, CVM	VP OF ADMINISTRATIVE AND FINANCE	VSU PRESIDENT	Place :	

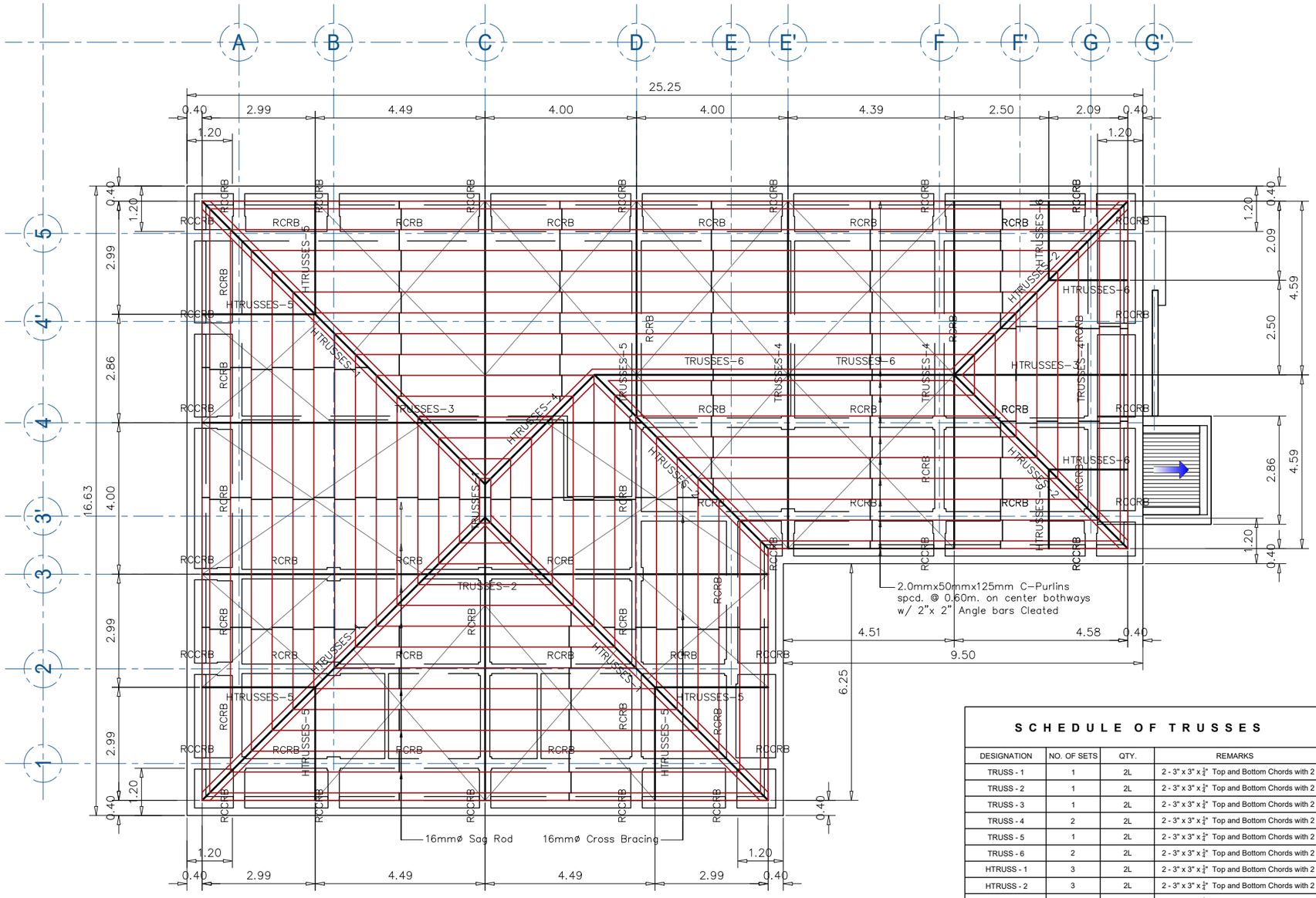

1 ROOF FRAMING PLAN
Scale: 1:125

SCHEDULE OF TRUSSES

DESIGNATION	NO. OF SETS	QTY.	REMARKS
TRUSS - 1	1	2L	2 - 3" x 3" x ¼" Top and Bottom Chords with 2 - 2"x 2" Web Members Angle Bars
TRUSS - 2	1	2L	2 - 3" x 3" x ¼" Top and Bottom Chords with 2 - 2"x 2" Web Members Angle Bars
TRUSS - 3	1	2L	2 - 3" x 3" x ¼" Top and Bottom Chords with 2 - 2"x 2" Web Members Angle Bars
TRUSS - 4	2	2L	2 - 3" x 3" x ¼" Top and Bottom Chords with 2 - 2"x 2" Web Members Angle Bars
TRUSS - 5	1	2L	2 - 3" x 3" x ¼" Top and Bottom Chords with 2 - 2"x 2" Web Members Angle Bars
TRUSS - 6	2	2L	2 - 3" x 3" x ¼" Top and Bottom Chords with 2 - 2"x 2" Web Members Angle Bars
HTRUSS - 1	3	2L	2 - 3" x 3" x ¼" Top and Bottom Chords with 2 - 2"x 2" Web Members Angle Bars
HTRUSS - 2	3	2L	2 - 3" x 3" x ¼" Top and Bottom Chords with 2 - 2"x 2" Web Members Angle Bars
HTRUSS - 3	1	2L	2 - 3" x 3" x ¼" Top and Bottom Chords with 2 - 2"x 2" Web Members Angle Bars
HTRUSS - 4	1	2L	2 - 3" x 3" x ¼" Top and Bottom Chords with 2 - 2"x 2" Web Members Angle Bars
HTRUSS - 5	6	2L	2 - 3" x 3" x ¼" Top and Bottom Chords with 2 - 2"x 2" Web Members Angle Bars
HTRUSS - 6	4	2L	2 - 3" x 3" x ¼" Top and Bottom Chords with 2 - 2"x 2" Web Members Angle Bars

SCHEDULE OF ROOF BEAMS

BEAM MARK	BEAM DIMENSIONS (meters)		STEEL REINFORCEMENTS							STIRRUPS
			REBAR (mmØ)	LEFT SUPPORT		MID - SPAN		RIGHT SUPPORT		
	b	h		TOP	BOTTOM	TOP	BOTTOM	TOP	BOTTOM	
RCRB	0.25	0.40	16mmØ	3	2	2	2	3	2	5 - 0.05m., 3 - 0.10m., 1 - 0.15m., rest @ 0.20m.
RCCRB	0.30	0.40	16mmØ	3	2	2	2	2	2	6 - 0.05m., 4 - 0.10m., 2 - 0.15m., rest @ 0.20m.

VISAYAS STATE UNIVERSITY

TIN :	Approved by :	# 19 : THESE DRAWINGS AND SPECIFICATIONS ARE OWNED BY THE CONTRACT DESIGNERS. ALL RIGHTS, COPIES, OR ERRATA OF DRAWINGS AND SPECIFICATIONS, AND THE REPRODUCTION, PUBLICATION OR USE OF THESE DOCUMENTS, OR ANY PART THEREOF, WITHOUT THE CONSENT OF THE DESIGNER CONTRACTOR, MAY BE PROSECUTED. ANY ALTERATIONS OR ADDITIONS TO THE DRAWINGS, SPECIFICATIONS OR OTHER DOCUMENTS, OR ANY PART THEREOF, MADE BY OTHERS WITHOUT THE WRITTEN CONSENT OF THE DESIGNER CONTRACTOR, MAY BE PROSECUTED TO THE FULLEST EXTENT OF THE LAW.	Project Title :	Checked by :	Noted by :	Conformed by :	Approved by :	Concept by :	S7 03
PRC :			CONSTRUCTION OF ANIMAL TESTING FACILITY	Engr. MARIO LILIO P. VALENZONA	Dr. SANTIAGO T. PENA, Jr.	Dr. DANIEL LESLIE S. TAN	Dr. EDGARDO E. TULIN	AutoCAD by :	SHEET NO.
PTR :								Date Started :	10 27
Date :								Date Finished :	
Place :	Structural Engineer		Location : VSU Main Campus, Baybay City, Leyte Philippines	DIRECTOR, PPO	DEAN, CVM	VP OF ADMINISTRATIVE AND FINANCE	VSU PRESIDENT	Place :	

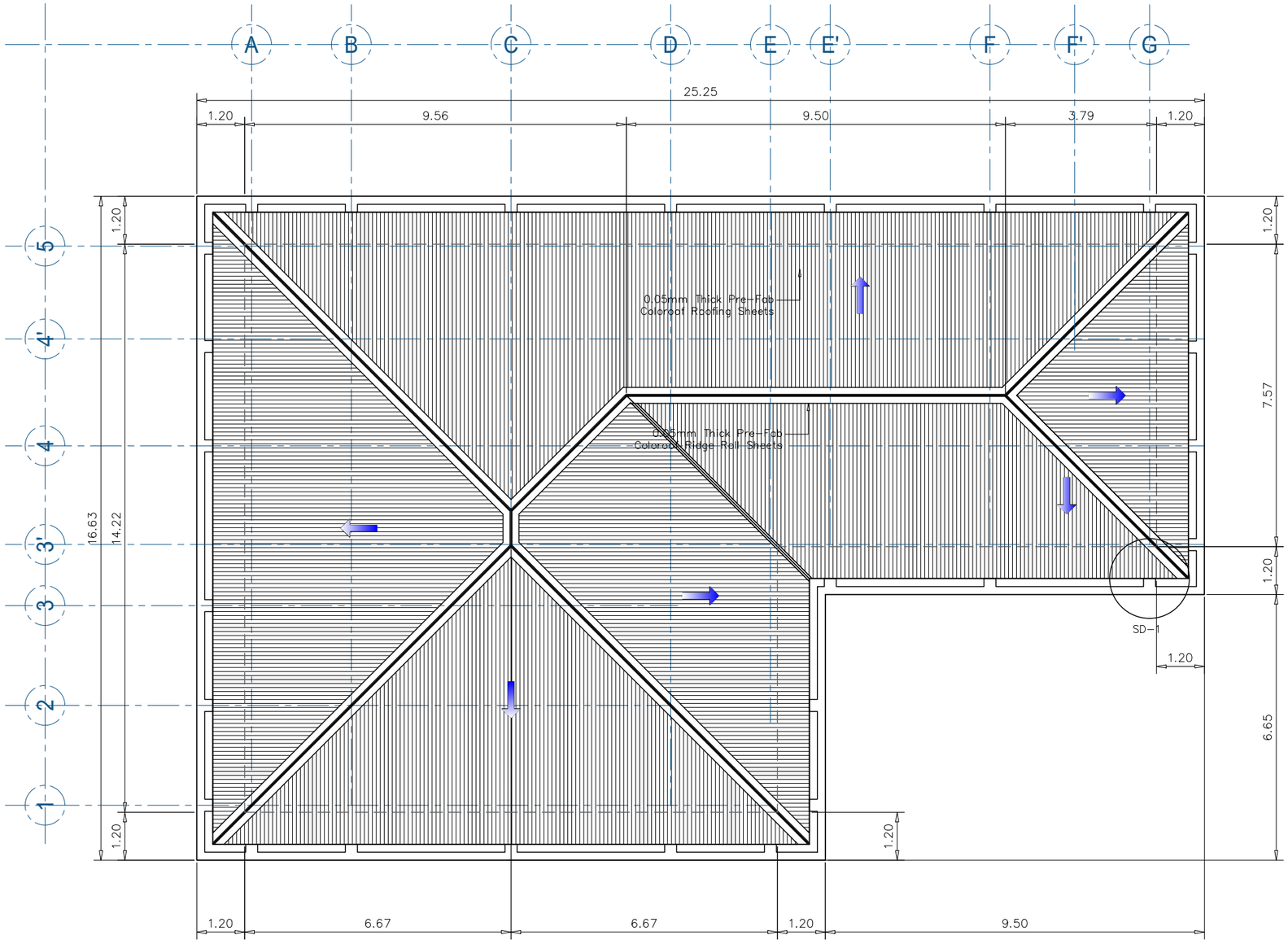

1 ROOF PLAN
Scale: 1:125

VISAYAS STATE UNIVERSITY	TIN :	Approved by :	NOTE: THESE DRAWINGS AND SPECIFICATIONS ARE OWNER CONTRACT DOCUMENTS. SUCH DRAWINGS, SPECIFICATIONS, OR DESIGNS, NOR INSTRUMENTS OF SERVICE, ARE THE INTELLECTUAL PROPERTY AND DOCUMENTS OF ARCHITECT. NEITHER THE OWNER NOR ARCHITECT MAY USE, REPRODUCE, OR ALTER, IN WHOLE OR IN PART, § 114 U.S. OF COPYRIGHT LAW WITHOUT PERMISSION OF THE OTHER. THE OWNER MAY USE, OR PERMIT OTHERS TO USE, THE INSTRUMENTS OF SERVICE FOR THE PROJECT OF WHICH THEY WERE CREATED, OR FOR ANY PURPOSE RELATED TO THE PROJECT, WITHOUT THE ARCHITECT'S WRITTEN CONSENT.	Project Title :	Checked by :	Noted by :	Conformed by :	Approved by :	Concept by :	S7	04
	PRC :			CONSTRUCTION OF ANIMAL TESTING FACILITY	Engr. MARIO LILIO P. VALENZONA	Dr. SANTIAGO T. PENA, Jr.	Dr. DANIEL LESLIE S. TAN	Dr. EDGARDO E. TULIN	AutoCAD by :		
	PTR :								Date Started :	SHEET NO.	
	Date :								Date Finished :	11	27
	Place :	Structural Engineer		Location : VSU Main Campus, Baybay City, Leyte Philippines	DIRECTOR, PPO	DEAN, CVM	VP OF ADMINISTRATIVE AND FINANCE	VSU PRESIDENT	Place :		

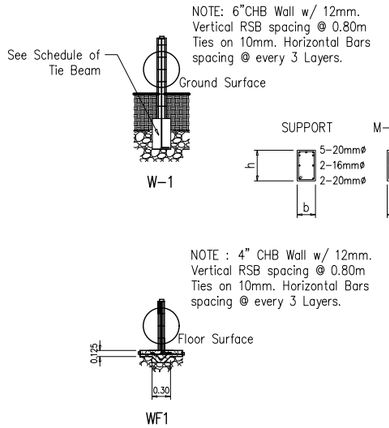

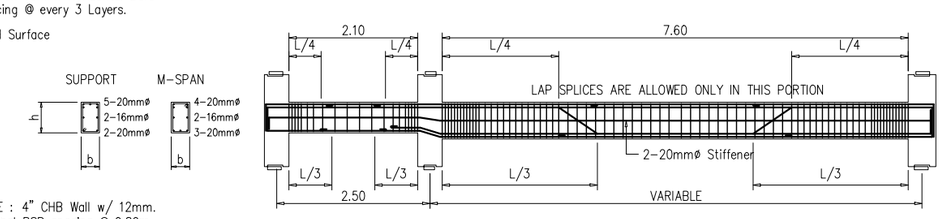

2 TYPICAL BEAM ELEVATION
Scale: 1:125

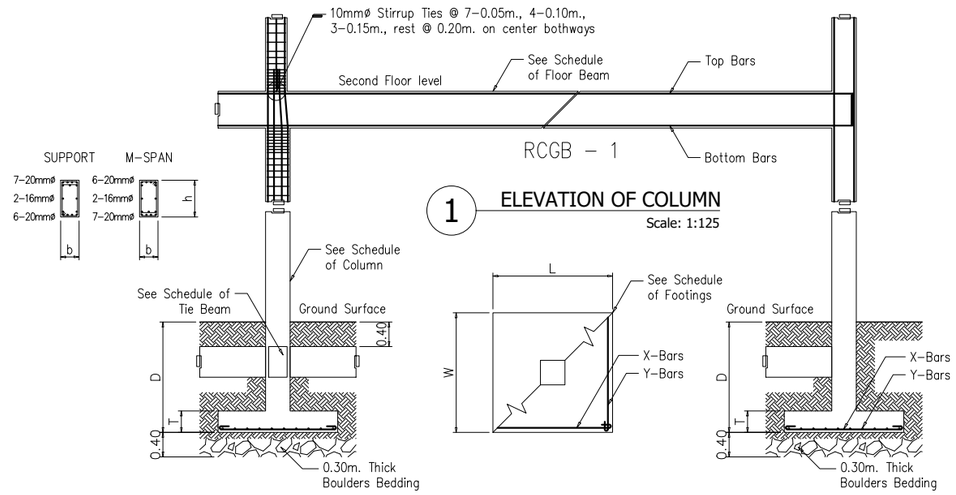

1 ELEVATION OF COLUMN
Scale: 1:125

3 DETAIL OF TIE BEAM
Scale: 1:125

4 TYPICAL FOOTING DETAIL
Scale: 1:125

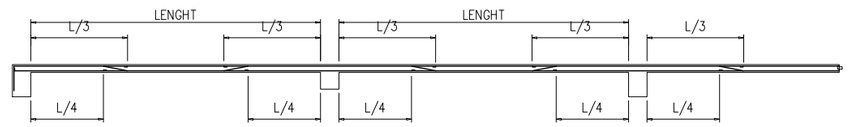

5 TYPICAL SLAB SECTION
Scale: 1:125

S C H E D U L E O F F L O O R B E A M S

BEAM MARK	BEAM DIMENSIONS (meters)		STEEL REINFORCEMENTS							STIRRUPS
			REBAR (mmØ)	LEFT SUPPORT		MID - SPAN		RIGHT SUPPORT		
	b	h		TOP	BOTTOM	TOP	BOTTOM	TOP	BOTTOM	
RCFB - 1	0.30	0.60	20mmØ	4	4	2	4	4	4	8 - 0.05m., 6 - 0.10m. rest @ 0.15m.
RCFB - 1A	0.30	0.50	20mmØ	4	4	2	4	4	4	7 - 0.05m., 5- 0.10m., 2 - 0.15m., rest @ 0.20m.
RCFB - 2	0.30	0.45	20mmØ	4	4	2	4	4	4	6 - 0.05m., 4- 0.10m., 2 - 0.15m., rest @ 0.20m.
RCFB - 3	0.25	0.45	20mmØ	3	2	2	3	3	2	5 - 0.05m., 3 - 0.10m., 1 - 0.15m., rest @ 0.20m.
RCCB - 1	0.30	0.50	20mmØ	4	4	2	4	4	4	8 - 0.05m., 6 - 0.10m., 4 - 0.15m., rest @ 0.20m.
RCCB - 2	0.30	0.45	16mmØ	4	4	2	4	4	4	6 - 0.05m., 4 - 0.10m., 2 - 0.15m., rest @ 0.20m.

S C H E D U L E O F F O O T I N G S

FOOTING MARK	FOOTING DIMENSIONS (meters)				REINFORCEMENTS		REMARKS
	LENGTH (L)	WIDTH (W)	DEPTH (D)	THICKNESS (T)	BAR - X	BAR - Y	
F - 1	2.15	1.95	1.80	0.35	10 - 20mmØ	11 - 20mmØ	SQUARE FOOTING
F - 2	1.95	1.85	1.80	0.30	9 - 20mmØ	10 - 20mmØ	- DO -
F - 3	0.95	0.95	0.95	0.25	5 - 16mmØ	5 - 16mmØ	- DO -

S C H E D U L E O F T I E B E A M

BEAM MARK	BEAM DIMENSIONS (meters)		STEEL REINFORCEMENTS							STIRRUPS
			REBAR (mmØ)	LEFT SUPPORT		MID - SPAN		RIGHT SUPPORT		
	b	h		TOP	BOTTOM	TOP	BOTTOM	TOP	BOTTOM	
RCTB	0.20	0.40	16mmØ	6	6	6	6	6	6	6 - 0.05m., 4 - 0.10m., 2 - 0.15m., rest @ 0.20m.

S C H E D U L E O F S L A B S

FLOOR LEVEL	SLAB MARK	THICKNESS (meters)	REBAR SPACING ALONG SHORT DIRECTION (mm)							REBAR SPACING ALONG LONG DIRECTION (mm)							REMARKS
			REBAR (mmØ)	LEFT SUPPORT		MID - SPAN		RIGHT SUPPORT		REBAR (mmØ)	LEFT SUPPORT		MID - SPAN		RIGHT SUPPORT		
				TOP	BOTTOM	TOP	BOTTOM	TOP	BOTTOM		TOP	BOTTOM	TOP	BOTTOM	TOP	BOTTOM	
2ND LEVEL																	
	S - 1	0.10	10mmØ	125	125		125	125	125	12mmØ	125	125		125	125	125	ONE - WAY
	S - 2	0.10	10mmØ	125	125		125	125	125	12mmØ	125	125		125	125	125	TWO - WAY

S C H E D U L E O F C O L U M N S

Scale : 1 : 50Mtrs.

LEVEL	C1	C2	C3
FOUNDATION TO 2ND FLOOR LEVEL	MAIN BAR : 12 - 20mmØ TIES : 10mmØ @ 8 - 0.05m., 6 - 0.10m., Rest 0.15M. O.C. 0.60 / 0.35	MAIN BAR : 8 - 20mmØ TIES : 10mmØ @ 8 - 0.05m., 4 - 0.10m., Rest 0.15M. O.C. 0.35 / 0.35	MAIN BAR : 6 - 16mmØ TIES : 10mmØ @ 5 - 0.05m., 3 - 0.10m., 2 - 0.15m., Rest 0.20M. O.C. 0.35 / 0.20
2ND FLOOR TO ROOF LEVEL	MAIN BAR : 12 - 16mmØ TIES : 10mmØ @ 8 - 0.05m., 6 - 0.10m., 2 - 0.15m., Rest 0.20M. O.C. 0.60 / 0.35	MAIN BAR : 8 - 16mmØ TIES : 10mmØ @ 8 - 0.05m., 4 - 0.10m., 2 - 0.15m., Rest 0.20M. O.C. 0.35 / 0.35	

VISAYAS STATE UNIVERSITY

TIN :	Approved by :	# ### THESE DRAWINGS AND SPECIFICATIONS ARE OTHER CONTRACT DOCUMENTS ...	Project Title :	Checked by :	Noted by :	Conformed by :	Approved by :	Concept by :
PRC :			CONSTRUCTION OF ANIMAL TESTING FACILITY	Engr. MARIO LILIO P. VALENZONA	Dr. SANTIAGO T. PENA, Jr.	Dr. DANIEL LESLIE S. TAN	Dr. EDGARDO E. TULIN	AutoCAD by :
PTR :								Date Started :
Date :								Date Finished :
Place :	Structural Engineer		Location : VSU Main Campus, Baybay City, Leyte Philippines	DIRECTOR, PPO	DEAN, CVM	VP OF ADMINISTRATIVE AND FINANCE	VSU PRESIDENT	Place :

S7 05
SHEET NO.
12 27

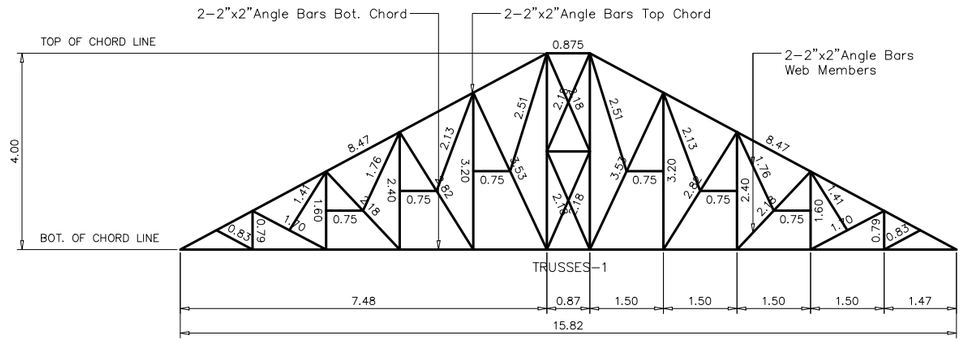

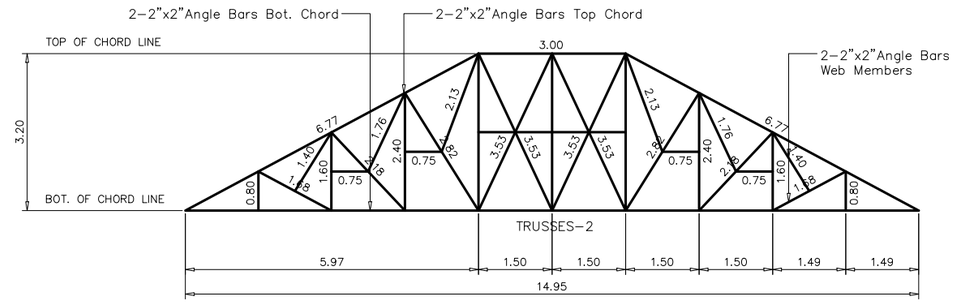

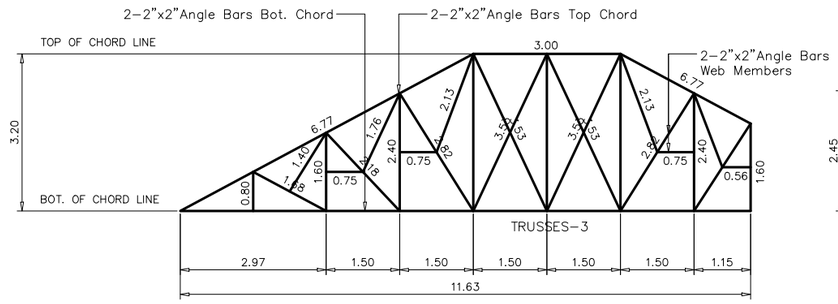

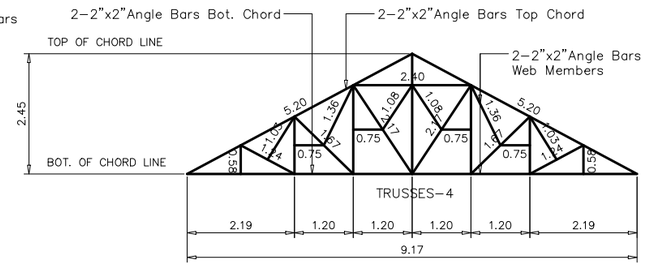

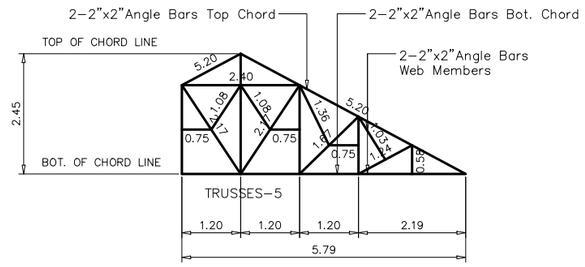

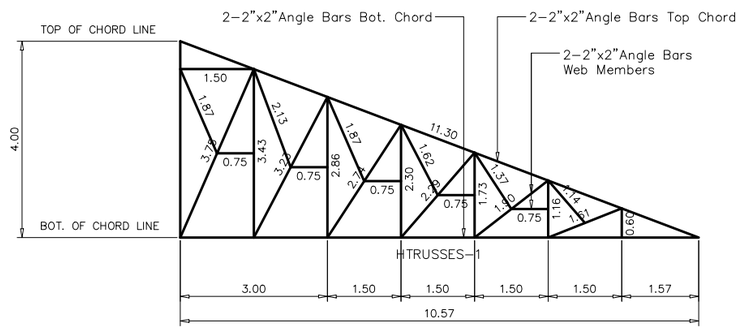

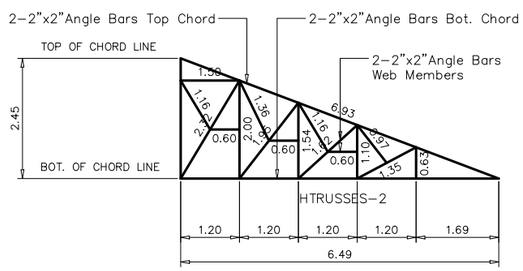

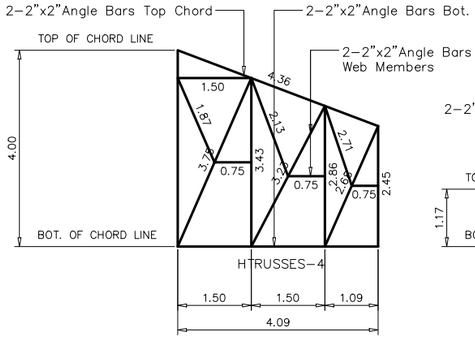

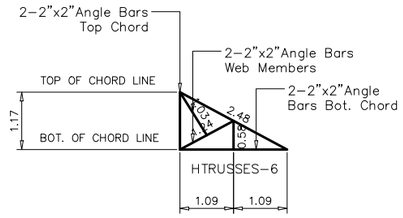

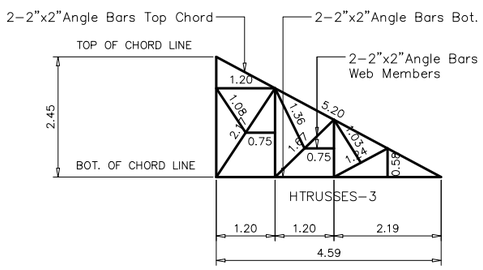

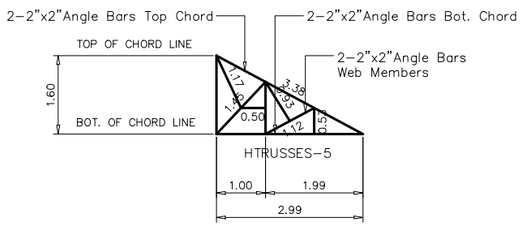

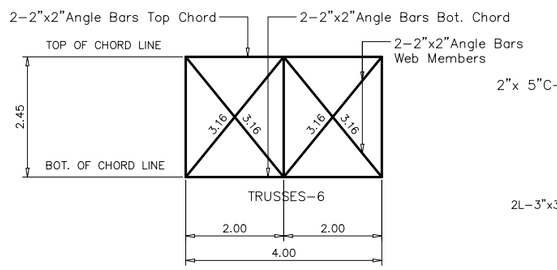

1 DETAIL OF STEEL TRUSSES

Scale: 1:125

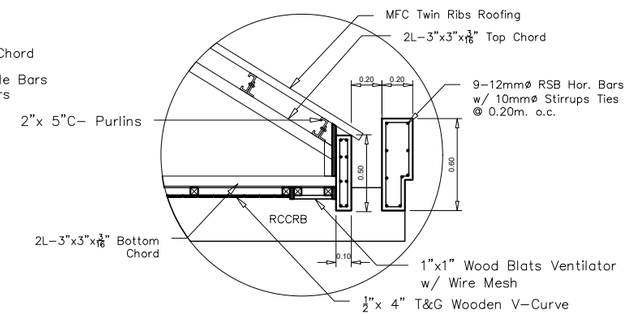

2 DETAIL OF R.C. FASCIA BOARD

Scale: 1:40

TIN :	Approved by :	# REV.	Project Title :	Checked by :	Noted by :	Conformed by :	Approved by :	Concept by :
PRC :			CONSTRUCTION OF ANIMAL TESTING FACILITY	Engr. MARIO LILIO P. VALENZONA	Dr. SANTIAGO T. PENA, Jr.	Dr. DANIEL LESLIE S. TAN	Dr. EDGARDO E. TULIN	AutoCAD by :
PTR :								Date Started :
Date :								Date Finished :
Place :	Structural Engineer		Location : VSU Main Campus, Baybay City, Leyte Philippines	DIRECTOR, PPO	DEAN, CVM	VP OF ADMINISTRATIVE AND FINANCE	VSU PRESIDENT	Place :

S7 06 — SHEET NO. 13 27

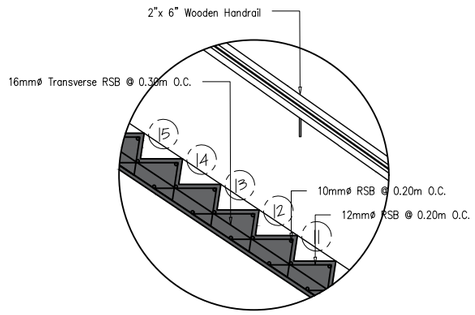

SD-1

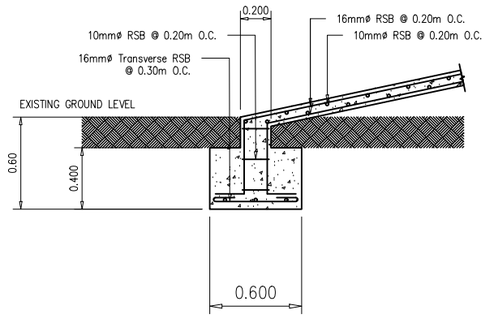

SD-2

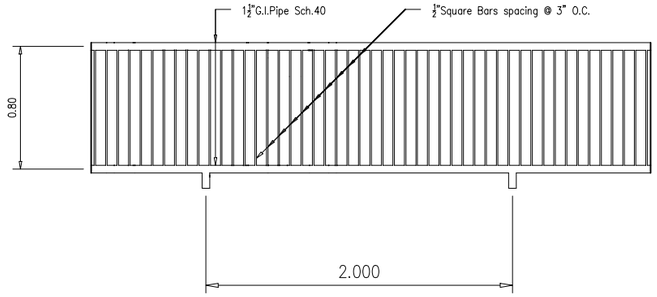

SD-3

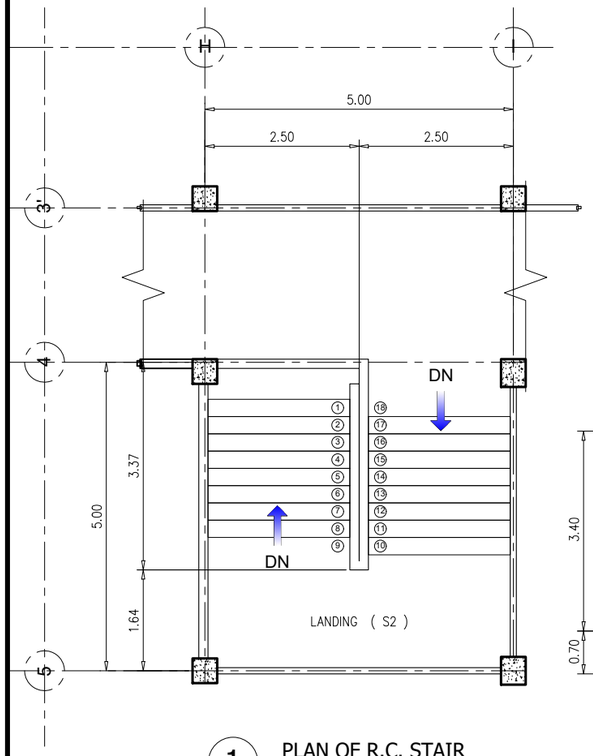

1 PLAN OF R.C. STAIR
Scale: 1:50

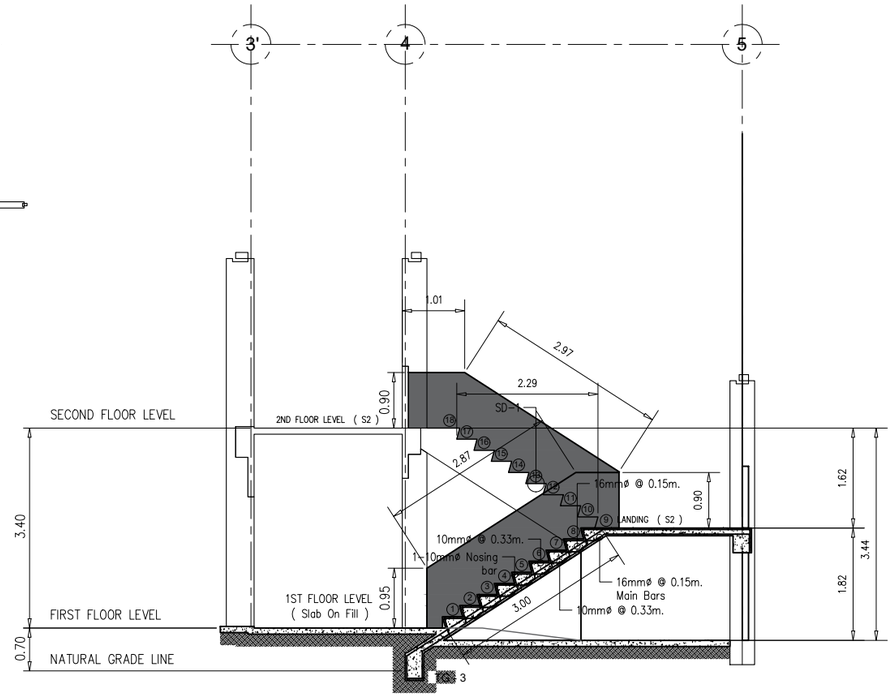

2 DETAIL SECTION OF R.C. STAIR
Scale: 1:50

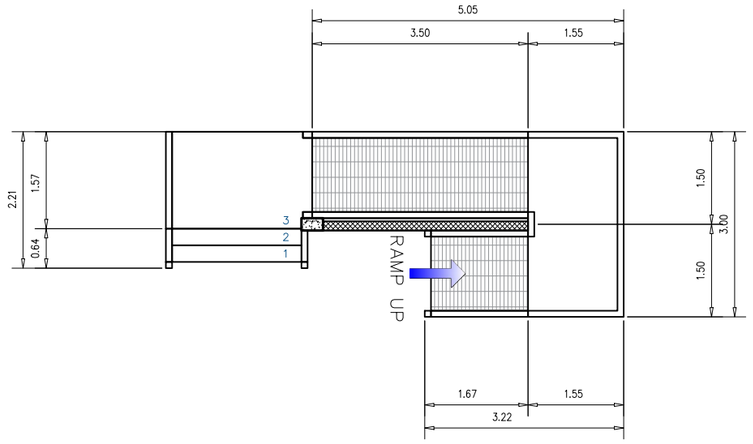

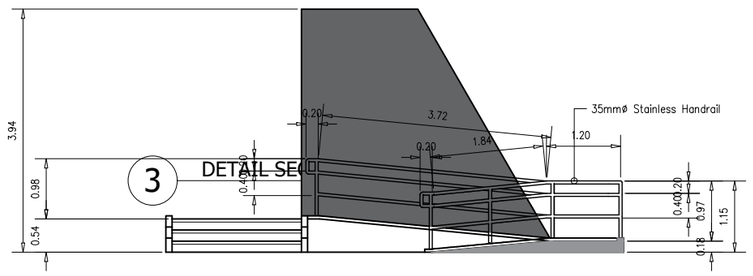

TIN :	Approved by :	# NTS : THESE DRAWINGS AND SPECIFICATIONS ARE OTHER CONTRACT DOCUMENTS ...	Project Title :	Checked by :	Noted by :	Conformed by :	Approved by :	Concept by :
PRC :			CONSTRUCTION OF ANIMAL TESTING FACILITY	Engr. MARIO LILIO P. VALENZONA	Dr. SANTIAGO T. PENA, Jr.	Dr. DANIEL LESLIE S. TAN	Dr. EDGARDO E. TULIN	AutoCAD by :
PTR :								Date Started :
Date :								Date Finished :
Place :	Structural Engineer		Location : VSU Main Campus, Baybay City, Leyte Philippines	DIRECTOR, PPO	DEAN, CVM	VP OF ADMINISTRATIVE AND FINANCE	VSU PRESIDENT	Place :

S7 07
SHEET NO.
14 27

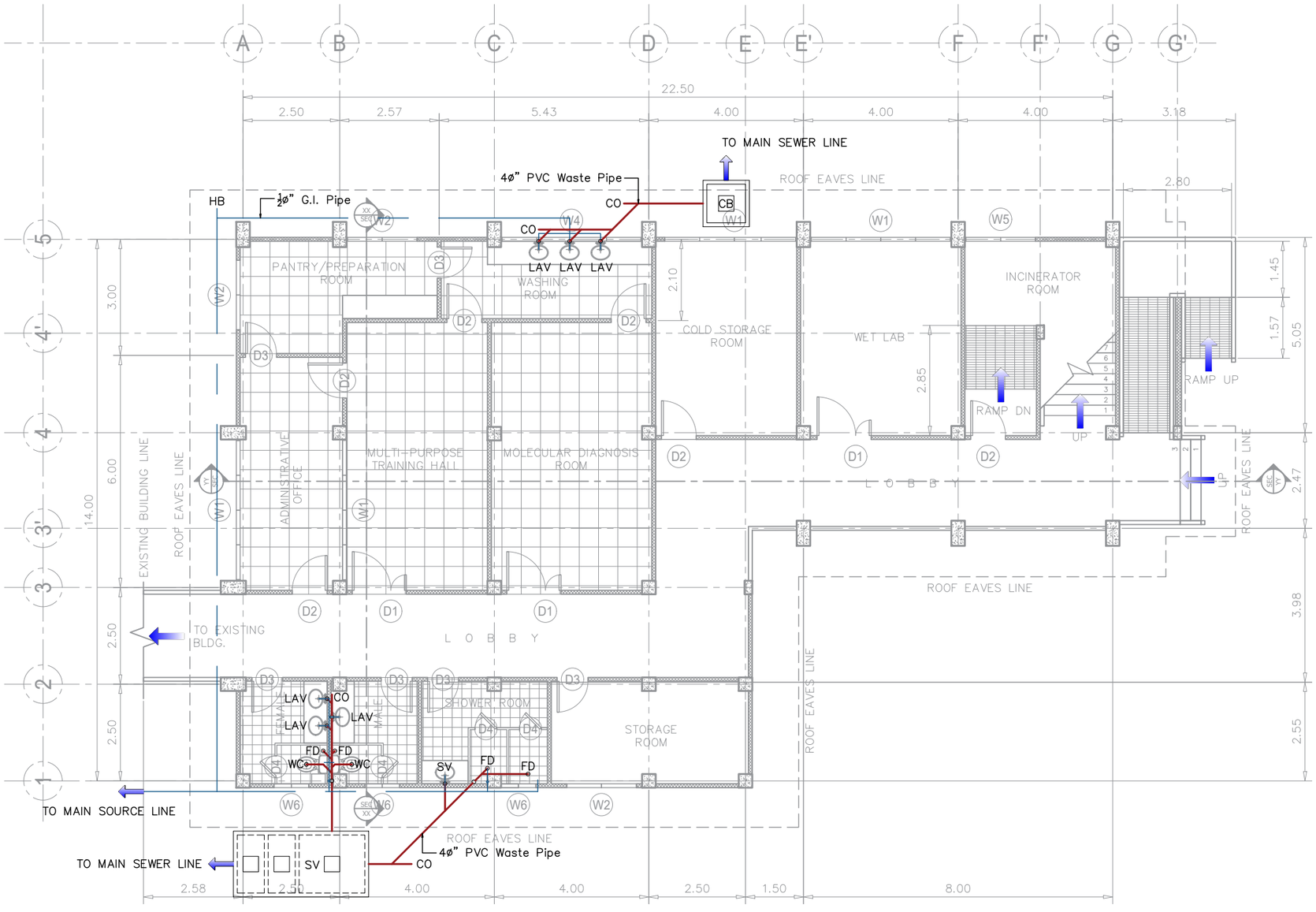

1 FIRST FLOOR PLUMBING LAYOUT

Scale: 1:125

TIN :	Approved by :	NOTE: THESE DRAWINGS AND SPECIFICATIONS ARE OWNER CONTRACT DOCUMENTS. ALL RIGHTS, TITLES AND INTERESTS IN DESIGN AND INSTRUMENTS OF SERVICE, ARE THE INTELLECTUAL PROPERTY OF THE DESIGNER. THE OWNER MAY USE THESE DOCUMENTS FOR CONSTRUCTION, OPERATION AND MAINTENANCE OF THE PROJECT. THE DESIGNER RETAINS ALL RIGHTS, INCLUDING COPYRIGHT, IN THE DESIGN. THESE DOCUMENTS MAY NOT BE REPRODUCED OR DISTRIBUTED TO THIRD PARTIES WITHOUT THE WRITTEN CONSENT OF THE DESIGNER.	Project Title :	Checked by :	Noted by :	Conformed by :	Approved by :	Concept by :	P4	01
PRC :			CONSTRUCTION OF ANIMAL TESTING FACILITY	Engr. MARIO LILIO P. VALENZONA	Dr. SANTIAGO T. PENA, Jr.	Dr. DANIEL LESLIE S. TAN	Dr. EDGARDO E. TULIN	AutoCAD by :		
PTR :								Date Started :	SHEET NO.	
Date :								Date Finished :	15	27
Place :	Sanitary Engineer		Location : VSU Main Campus, Baybay City, Leyte Philippines	DIRECTOR, PPO	DEAN, CVM	VP OF ADMINISTRATIVE AND FINANCE	VSU PRESIDENT	Place :		

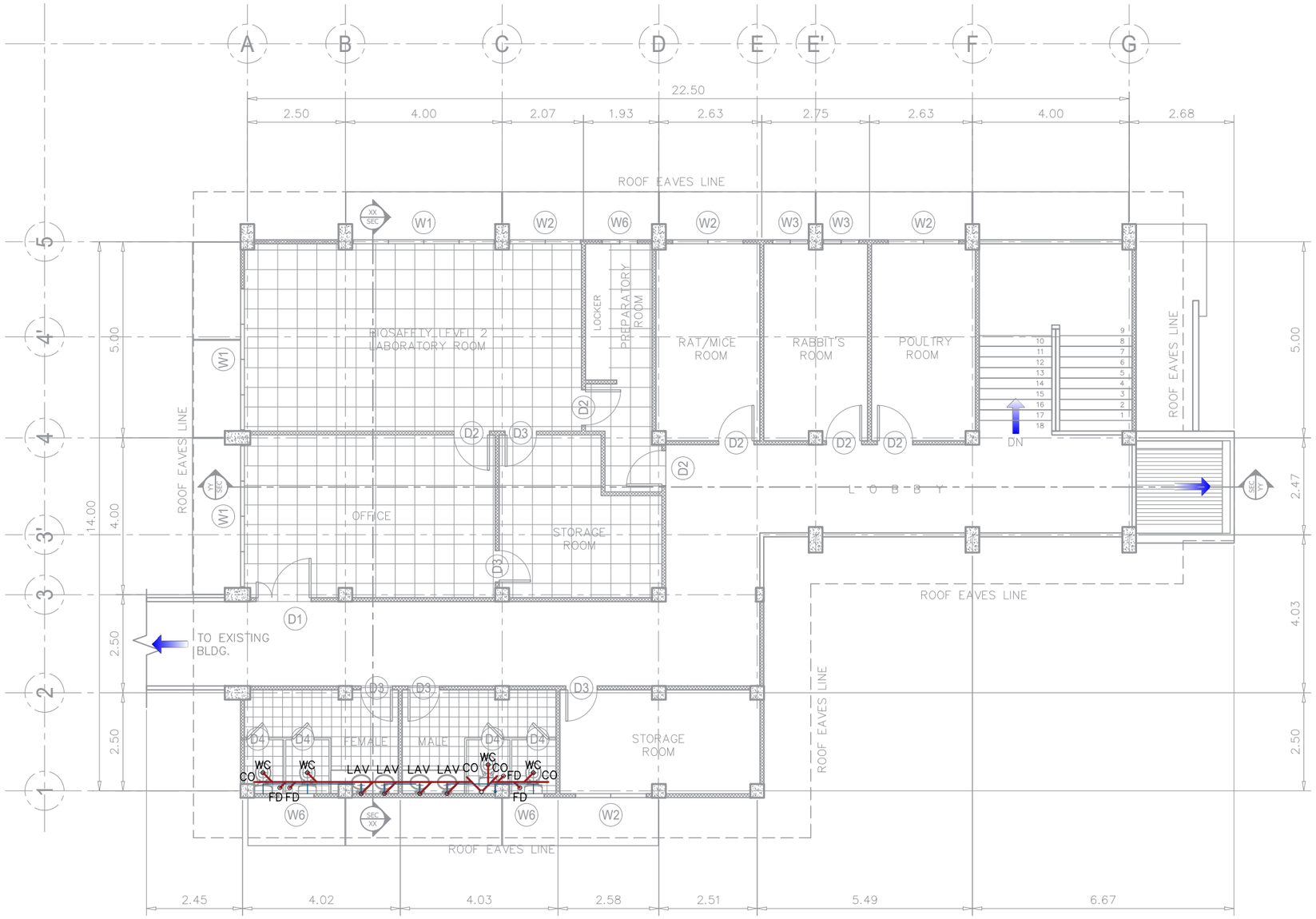

1 SECOND FLOOR PLUMBING LAYOUT

Scale: 1:125

TIN :	Approved by :	NOTE: THESE DRAWINGS AND SPECIFICATIONS ARE OWNED CONTRACT DOCUMENTS SOLE EXPRESS STATUTORY OR REGULATORY AUTHORITIES OR SERVICE AND THE INTELLECTUAL PROPERTIES AND DESIGNERS OF ARCHITECT. NEITHER THE SUBJECT FOR WHICH THEY WERE MADE SUBMITTED OR NOT IT SHALL BE UNLAWFUL OR ANY PERSON TO DUPLICATE OR TO MAKE CHANGES OF ANY DOCUMENTS OR USE ARCHITECTURAL OR PART OF OTHER PROJECTS OR BUILDINGS, NEITHER DESCRIBED PARTLY OR IN WHOLE. WITHOUT THE WRITTEN CONSENT OF ARCHITECT. OR AUTHOR OF ANY DOCUMENTS.	Project Title :	Checked by :	Noted by :	Conformed by :	Approved by :	Concept by :	P4 02
PRC :							AutoCAD by :	
PTR :							Date Started :	SHEET NO.
Date :							Date Finished :	16 27
Place :	Sanitary Engineer		Location : VSU Main Campus, Baybay City, Leyte Philippines	DIRECTOR, PPO	DEAN, CVM	VP OF ADMINISTRATIVE AND FINANCE	VSU PRESIDENT	Place :

CONSTRUCTION OF ANIMAL TESTING FACILITY

Engr. MARIO LILIO P. VALENZONA

Dr. SANTIAGO T. PENA, Jr.

Dr. DANIEL LESLIE S. TAN

Dr. EDGARDO E. TULIN

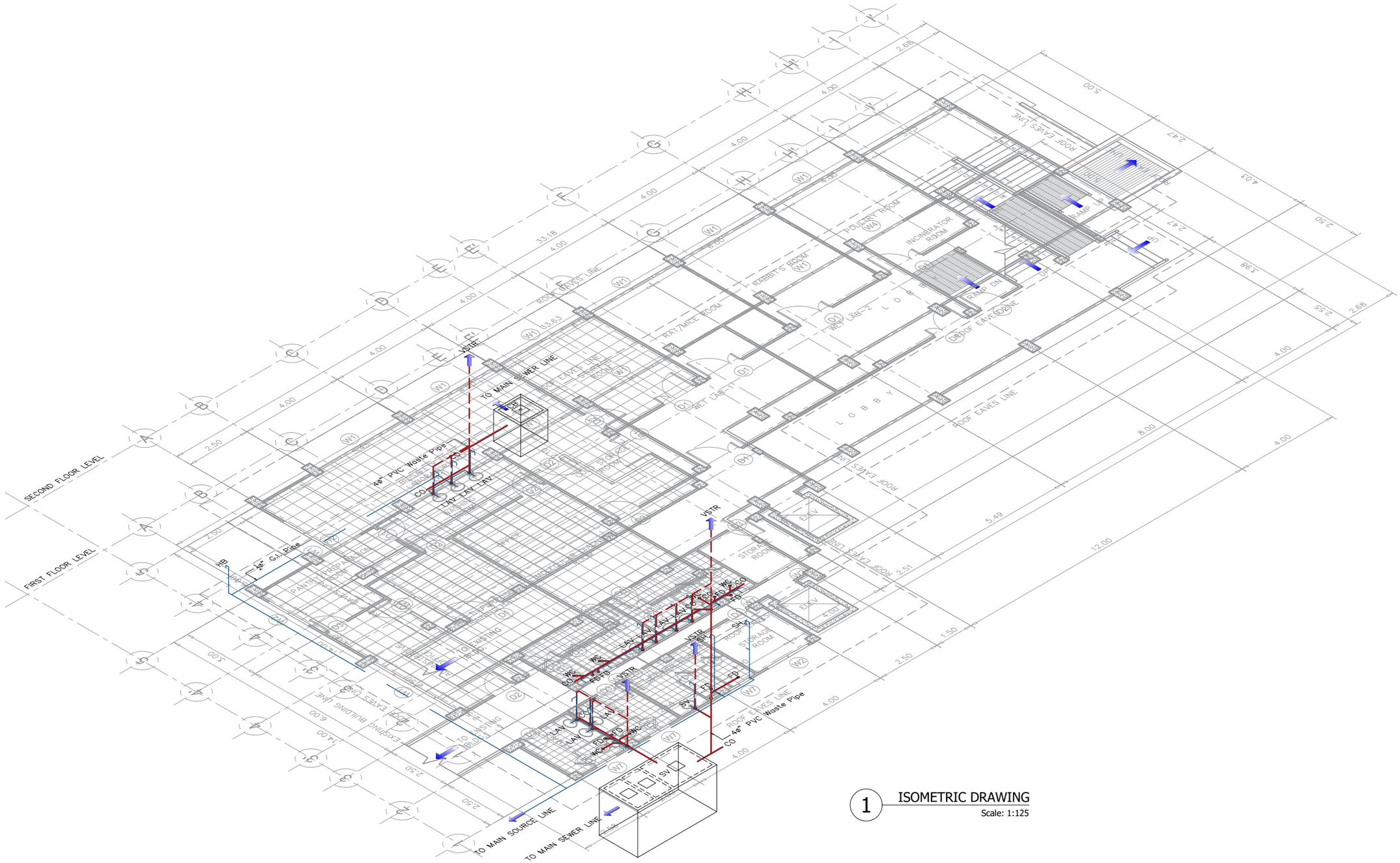

1 ISOMETRIC DRAWING
Scale: 1:125

TIN :	Approved by :	# / T: THESE DRAWINGS AND SPECIFICATIONS AND OTHER CONTRACT DOCUMENTS ...	Project Title :	Checked by :	Noted by :	Conformed by :	Approved by :	Concept by :	P4 03
PRC :			CONSTRUCTION OF ANIMAL TESTING FACILITY	Engr. MARIO LILIO P. VALENZONA	Dr. SANTIAGO T. PENA, Jr.	Dr. DANIEL LESLIE S. TAN	Dr. EDGARDO E. TULIN	AutoCAD by :	
PTR :								Date Started :	SHEET NO.
Date :								Date Finished :	17 27
Place :	Sanitary Engineer		Location : VSU Main Campus, Baybay City, Leyte Philippines	DIRECTOR, PPO	DEAN, CVM	VP OF ADMINISTRATIVE AND FINANCE	VSU PRESIDENT	Place :	

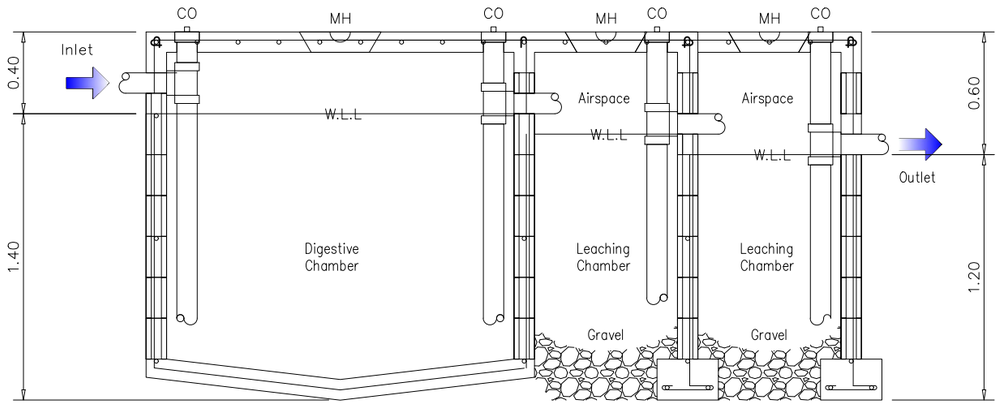

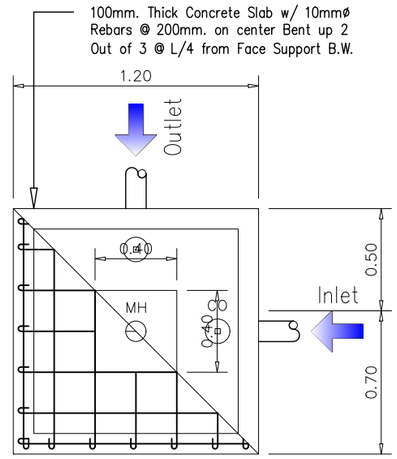

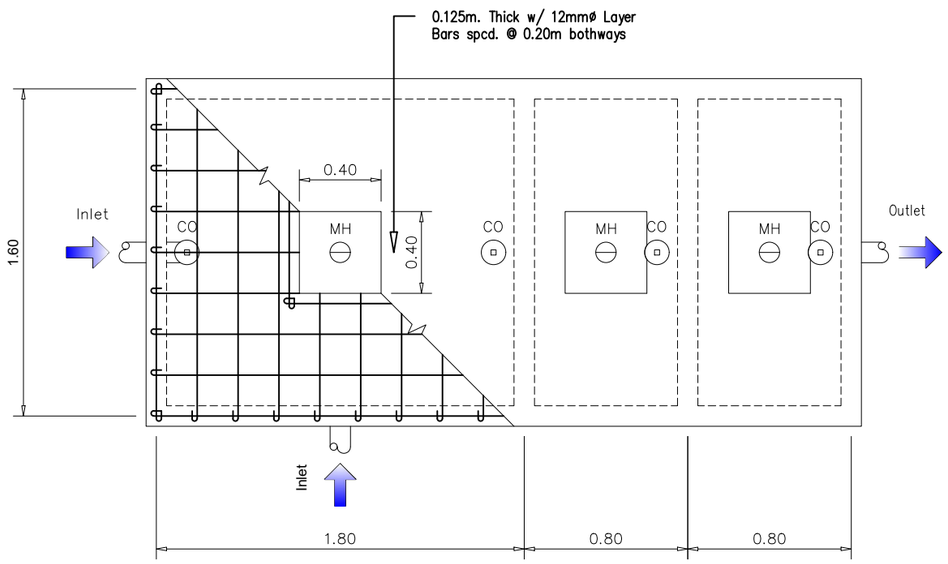

1 DETAIL OF R.C. SEPTIC VAULT
Scale: 1:125

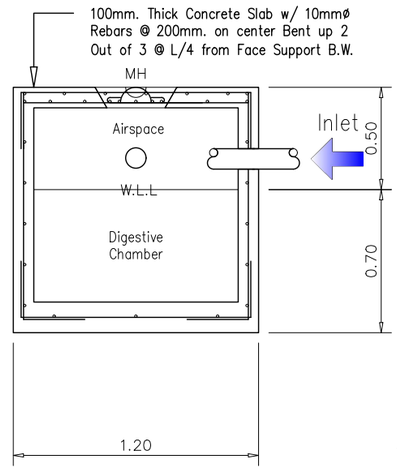

2 DETAIL OF R.C. CATCH BASIN
Scale: 1:125

4 LEGEND

CV	CHECK VALVE
F	FAUCET
FD	FLOOR DRAIN
CB	CATCH BASIN
CS	COUNTER SINK
GV	GATE VALVE
HB	HOSE BIBB
LAV	LAVATORY
MH	MANHOLE
SH	SHOWER HEAD
SV	SEPTIC VAULT
VSTR	VENT STACH THRU ROOF
WC	WATER CLOSET
WM	WATER METER
———	2"ø PVC VENT PIPE LINE
———	4"ø PVC WASTE PIPE LINE
———	1/2"ø PVC WATER PIPE LINE

3 PLUMBING NOTE

1 – ALL WORKS SHALL CONFORM TO THE RULES AND REGULATION OF THE NATIONAL PLUMBING CODE.

2 – PLUMBING INSTALLATIONS SHALL BE DONE THRU THE DIRECT SUPERVISION OF A DULY LICENSED MASTER PLUMBER.

3 – ALL MATERIALS TO BE USED SHALL BE NEW AND APPROVED TYPE OF LOCATION AND PURPOSE.

4 – RUN ALL HORIZONTAL PIPINGS IN PERPECT ALIGNMENT AND AT A FORM GRADE NOT LESS THAN TWO PERCENT (2%).

5 – THE DIGESTION CHAMBER OF SEPTIC TANK MUST BE WATERPROOFED.

6 – NO SEPTIC TANK SHALL BE CONSTRUCTED UNDER THE BUILDING.

7 – NOT LESS THAN 300MM. OF AIR SPACE MUST BE LEFT BETWEEN THE TOP OF THE SEWAGE AND THE UNDER PART OF TANK ROOF SLAB.

8 – ALL PLUMBING WORKS SHALL BE UNDER THE DIRECT SUPERVISION OF A LICENSED MASTER PLUMBER AND ARCHITECT.

TIN :	Approved by :	NOTE: THESE DRAWINGS AND SPECIFICATIONS ARE OTHER CONTRACT DOCUMENTS SUCH AS BEING OWNED BY THE DESIGN AND AUTHORSHIP IN REPUTE. AND THE INTELLECTUAL PROPERTY AND DOCUMENTS OF ARCHITECT. REGARD THE SUBJECT FOR WHICH THEY ARE MADE. DESIGNED. THE NOT TO BE USED ON OTHER PROJECTS OR EXTENSIONS TO THIS PROJECT BY ANY OTHER PERSONS WITHOUT THE WRITTEN CONSENT OF THE DESIGNER OR THE ARCHITECT OR ANY OTHER PROJECTS OF REGARDS. REPORT DESIGNS PARTS IN WHOLE. WITHOUT THE WRITTEN CONSENT OF ARCHITECT OR AUTHOR OF THE DOCUMENTS	Project Title :	Checked by :	Noted by :	Conformed by :	Approved by :	Concept by :	P4 04
PRC :		CONSTRUCTION OF ANIMAL TESTING FACILITY	Engr. MARIO LILIO P. VALENZONA	Dr. SANTIAGO T. PEÑA, Jr.	Dr. DANIEL LESLIE S. TAN	Dr. EDGARDO E. TULIN	AutoCAD by :	
PTR :							Date Started :	SHEET NO.
Date :							Date Finished :	18 27
Place :	Sanitary Engineer		Location : VSU Main Campus, Baybay City, Leyte Philippines	DIRECTOR, PPO	DEAN, CVM	VP OF ADMINISTRATIVE AND FINANCE	VSU PRESIDENT	Place :